NTK587DLE5-40-C

Ciena® NTK587DLE5 Compatible TAA 10GBase-DWDM XFP Transceiver 100GHz (SMF, 1561.42nm, 40km, LC, DOM)

Features:

- INF-8077i Compliance
- Duplex LC Connector
- Temperature-stabilized EML transmitter and PIN receiver
- Single-mode Fiber
- Commercial Temperature 0 to 70 Celsius
- Hot Pluggable
- Metal with Lower EMI
- Excellent ESD Protection
- RoHS Compliant and Lead Free

Applications:

- 10x Gigabit Ethernet over DWDM
- 8x/10x Fibre Channel
- Access, Metro and Enterprise

Product Description

This Ciena® NTK587DLE5 compatible XFP transceiver provides 10GBase-DWDM throughput up to 40km over single-mode fiber (SMF) using a wavelength of 1561.42nm via an LC connector. It can operate at temperatures between 0 and 70C. Our transceiver is built to meet or exceed OEM specifications and is guaranteed to be 100% compatible with Ciena®. It has been programmed, uniquely serialized, and tested for data-traffic and application to ensure that it will initialize and perform identically. All of our transceivers comply with Multi-Source Agreement (MSA) standards to provide seamless network integration. Additional product features include Digital Optical Monitoring (DOM) support which allows access to real-time operating parameters. This transceiver is Trade Agreements Act (TAA) compliant. We stand behind the quality of our products and proudly offer a limited lifetime warranty.

ProLabs' transceivers are RoHS compliant and lead-free.

TAA refers to the Trade Agreements Act (19 U.S.C. & 2501-2581), which is intended to foster fair and open international trade. TAA requires that the U.S. Government may acquire only "U.S.-made or designated country end products.")

Rev. 012026

Regulatory Compliance

- ESD to the Electrical PINs: compatible with MIL-STD-883E Method 3015.4
- ESD to the LC Receptacle: compatible with IEC 61000-4-3
- EMI/EMC compatible with FCC Part 15 Subpart B Rules, EN55022:2010
- Laser Eye Safety compatible with FDA 21CFR, EN60950-1& EN (IEC) 60825-1,2
- RoHS compliant with EU RoHS 2.0 directive 2015/863/EU

Wavelength Guide (100GHz ITU-T Channel)

Channel #	Frequency (THz)	Center Wavelength (nm)
17	191.7	1563.86
18	191.8	1563.05
19	191.9	1562.23
20	192.0	1561.42
21	192.1	1560.61
22	192.2	1559.79
23	192.3	1558.98
24	192.4	1558.17
25	192.5	1557.36
26	192.6	1556.55
27	192.7	1555.75
28	192.8	1554.94
29	192.9	1554.13
30	193.0	1553.33
31	193.1	1552.52
32	193.2	1551.72
33	193.3	1550.92
34	193.4	1550.12
35	193.5	1549.32
36	193.6	1548.51
37	193.7	1547.72
38	193.8	1546.92
39	193.9	1546.12
40	194.0	1545.32
41	194.1	1544.53
42	194.2	1543.73
43	194.3	1542.94
44	194.4	1542.14

45	194.5	1541.35
46	194.6	1540.56
47	194.7	1539.77
48	194.8	1538.98
49	194.9	1538.19
50	195.0	1537.40
51	195.1	1536.61
52	195.2	1535.82
53	195.3	1535.04
54	195.4	1534.25
55	195.5	1533.47
56	195.6	1532.68
57	195.7	1531.90
58	195.8	1531.12
59	195.9	1530.33
60	196.0	1529.55
61	196.1	1528.77

Absolute Maximum Ratings

Parameter	Symbol	Min.	Max.	Unit
Maximum Supply Voltage	Vcc3	-0.5	4.0	V
	Vcc5	-0.5	6.0	V
Storage Temperature	TS	-40	85	°C
Operating Case Temperature	TO	0	70	°C
Relative Humidity	RH	5	95	%
Data Rate		9.95	11.3	Gb/s

Electrical Characteristics

Parameter	Symbol	Min.	Typ.	Max.	Unit	Notes
Power Supply Voltage	Vcc3	3.135	3.3	3.465	V	
	Vcc5	4.75	5.00	5.25	V	
Power Supply Current	Icc3			750	mA	
	Icc5			500		
Power Dissipation	P_D			3500	mW	
Transmitter						
Differential data input swing	Vin,pp	120		1000	mVp-p	
Input differential impedance	Zin		100		Ω	
TX_Disable, P_Down/RST	VIH	2.0		Vcc3+0.3	V	
	VIL	-0.3		0.8	V	
Transmit Disable Assert Time				10	us	
Receiver						
Differential data output swing	Vout, pp	340		850	mVp-p	1
Output differential impedance	Zo		100		Ω	
Data Output Rise Time, Fall Time	tr, tf	24			ps	2
Rx_LOS, Mod-NR, Interrupt	VOH	VccHost-0.5		VccHost+0.3	V	3
	VOL	0		0.4	V	3

Notes:

1. Internally AC coupled, but requires an external 100Ω differential termination.
2. 20-80%.
3. Loss of Signal is an open collector output. Should be pulled up with a 4.7kΩ-10kΩ resistor on the host board.

Optical Characteristics

Parameter	Symbol	Min.	Typ.	Max.	Unit	Notes
Transmitter						
Launch Average Optical Power	Po	-1		+4	dBm	1
Center Wavelength Range	λc	1528.77		1563.86	nm	
Center Wavelength Spacing			100		GHz	
Center Wavelength Tolerance	Δλc	-100		100	pm	
Extinction Ratio	ER	9			dB	2
Spectral Width (-20dB)	Δλ			0.3	nm	
Side Mode Suppression Ratio	SMSR	30			dB	

Average Optical Power (Laser Off)	P_{off}			-30	dBm	1
Eye Diagram	ITU-T G.691 SDH STM-64 L-64.2 compatible					2
Receiver						
Center Wavelength	λ_c	1528		1565	nm	
Receiver Sensitivity @ 9.953Gb/s	S			-24.0	dBm	3
Receiver Sensitivity @ 11.1 Gb/s	S			-15	dBm	4
Receiver overload (P_{avg})	P_{OL}	-1			dBm	3
Path Penalty @1600ps @9.953Gb/s	PP1			2	dB	3
Path Penalty @1600ps @11.1 Gb/s	PP2			3	dB	4
Optical Return Loss	ORL	27			dB	
LOS De-Assert	LOS_D			-27	dBm	
LOS Assert	LOS_A	-38			dBm	
LOS Hysteresis		0.5			dB	

Notes:

1. Measured with worst ER; 1550nm; PRBS 2^{31}-1 test pattern @ 9.953 Gb/s, BER<10^{-12}.
2. Measured with worst ER; 1550nm; PRBS 2^{31}-1 test pattern @ 11.1 Gb/s, BER<10^{-12}.

Pin Descriptions

Pin	Logic	Symbol	Name/Descriptions	Ref.
1		GND	Module Ground	1
2		Vee5	Optional -5.2v Power Supply (not required)	
3	LVTTL-I	MOD_DESEL	Module De-select; When Held low allows the module to respond to 2-wire serial interface.	
4	LVTTL-O	INTERRUPT	Interrupt; Indicates presence of an important condition which can be read via the 2-wire serial interface.	2
5	LVTTL-I	TX_DIS	Transmitter Disable; Turns off transmitter laser output	
6		VCC5	+5V Power Supply	
7		GND	Module Ground	1
8		VCC3	+3.3V Power Supply	
9		VCC3	+3.3V Power Supply	
10	LVTTL-I/O	SCL	2-Wire Serial Interface Clock.	2
11	LVTTL-I/O	SDA	2-Wire Serial Interface Data Line.	2
12	LVTTL-O	MOD_Abs	Indicates Module is not present. Grounded in the Module.	2
13	LVTTL-O	MOD_NR	Module Not Ready; Indicating Module Operational Fault.	2
14	LVTTL-O	RX_LOS	Receiver Loss of Signal Indicator	2
15		GND	Module Ground	1
16		GND	Module Ground	1
17	CML-O	RD-	Receiver Inverted Data Output	
18	CML-O	RD+	Receiver Non-Inverted Data Output.	
19		GND	Module Ground	1
20		VCC2	+1.8V Power Supply (Not required).	
21	LVTTL-I	P_DOWN/RST	Power down; When high, requires the module to limit power consumption to 1.5W or below. 2-Wire serial interface must be functional in the low power mode. Reset; The falling edge initiates a complete reset of the module including the 2-wire serial interface, equivalent to a power cycle.	
22		VCC2	+1.8V Power Supply (Not required)	
23		GND	Module Ground	1
24	PECL-I	REFCLK+	Reference Clock Non-Inverted Input, AC coupled on the host board- not required.	3
25		REFCLK-	Reference Clock Inverted Input, AC coupled on the host board-Not Required	3
26		GND	Module Ground	1
27		GND	Module Ground	1
28	CML-I	TD-	Transmitter Inverted Data Input.	
29	CML-I	TD+	Transmitter Non-Inverted Data Input.	
30		GND	Module Ground	1

Notes:

1. Module ground pins GND are isolated from the module case.
2. Shall be oulled up with 4.7KΩ to 10KΩ to a voltage between 3.15V and 3.45V on the host board.
3. Reference Clock is not required. If present, it will be ignored.

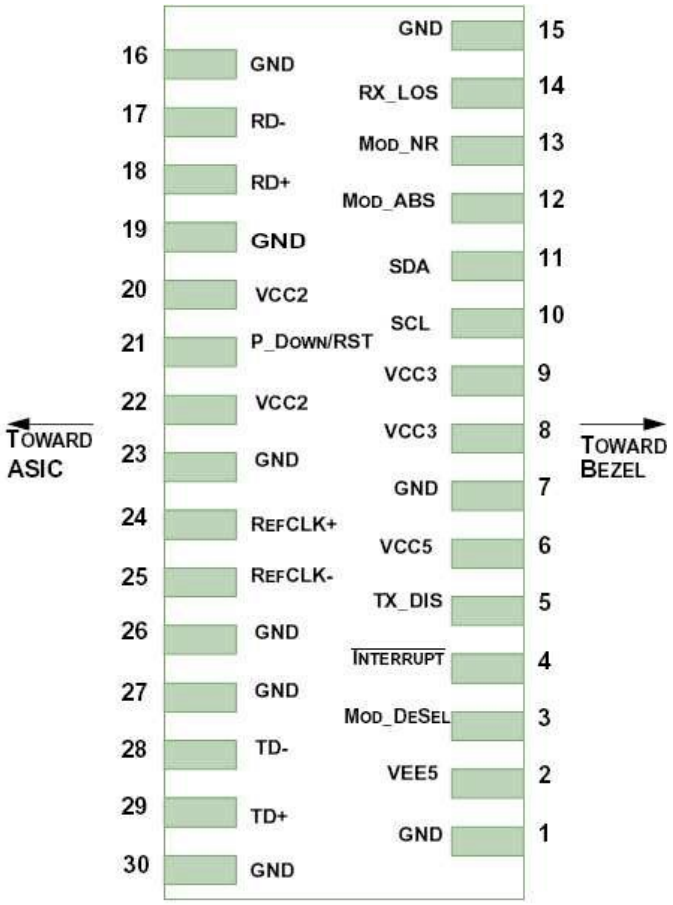

Pin-out of connector Block on Host board

OSNR Characteristics

Bit Rate (Gbps)	Dispersion (ps/nm)	OSNR (dB)	Receiver Sensitivity (dBm)	BER
9.95/10.3	0	>30	-24 ~-7	10E-12
		>25	-18 ~-7	
	1200	>30	-23 ~-7	
		>27	-18 ~ -7	
	1600	>30	-22 ~-7	
		>28	-18 ~-7	
10.7/11.1 with FEC	0	>30	-26 ~-7	10E-4
		>16	-18 ~-7	
	1200	>30	-25 ~-7	
		>18	-18 ~-7	
	1600	>30	-22 ~-7	
		>20	-18 ~-7	

Recommended Application Interface Block Diagram

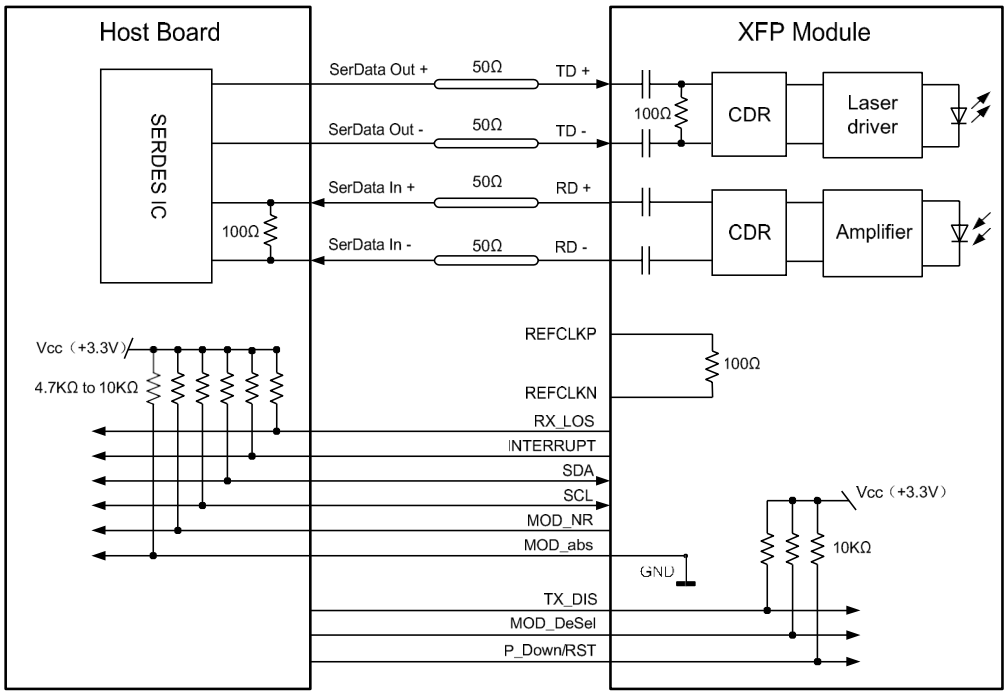

Recommended Host Board Power Supply Filter Network

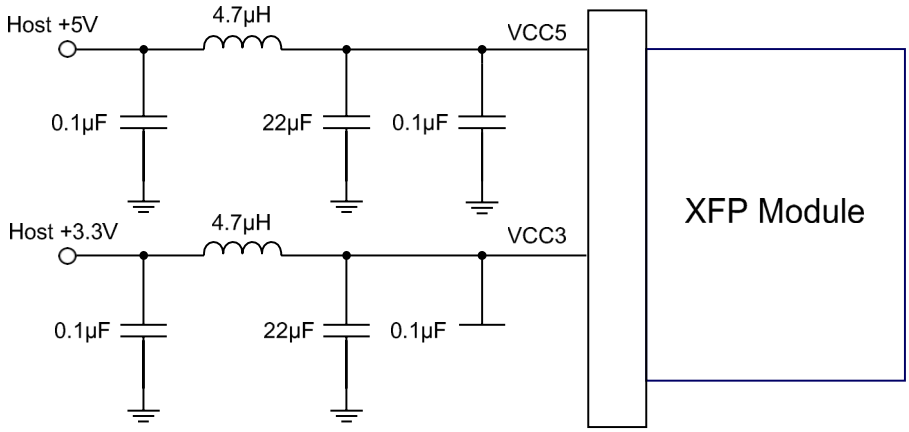

Management Interface

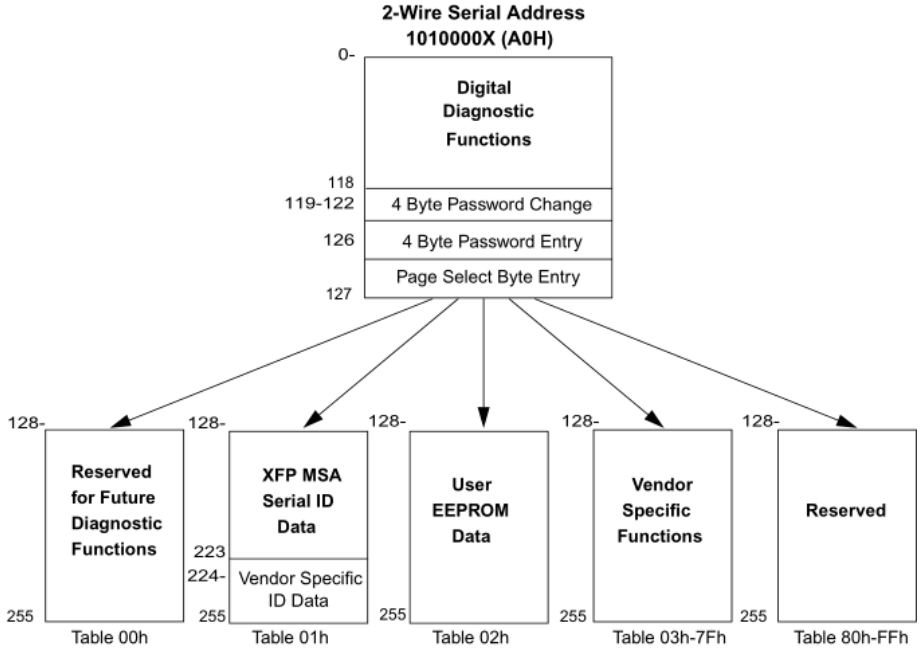

Mechanical Specifications

Small Form Factor Pluggable (XFP) transceivers are compatible with the dimensions defined by the XFP Multi-Sourcing Agreement (MSA).

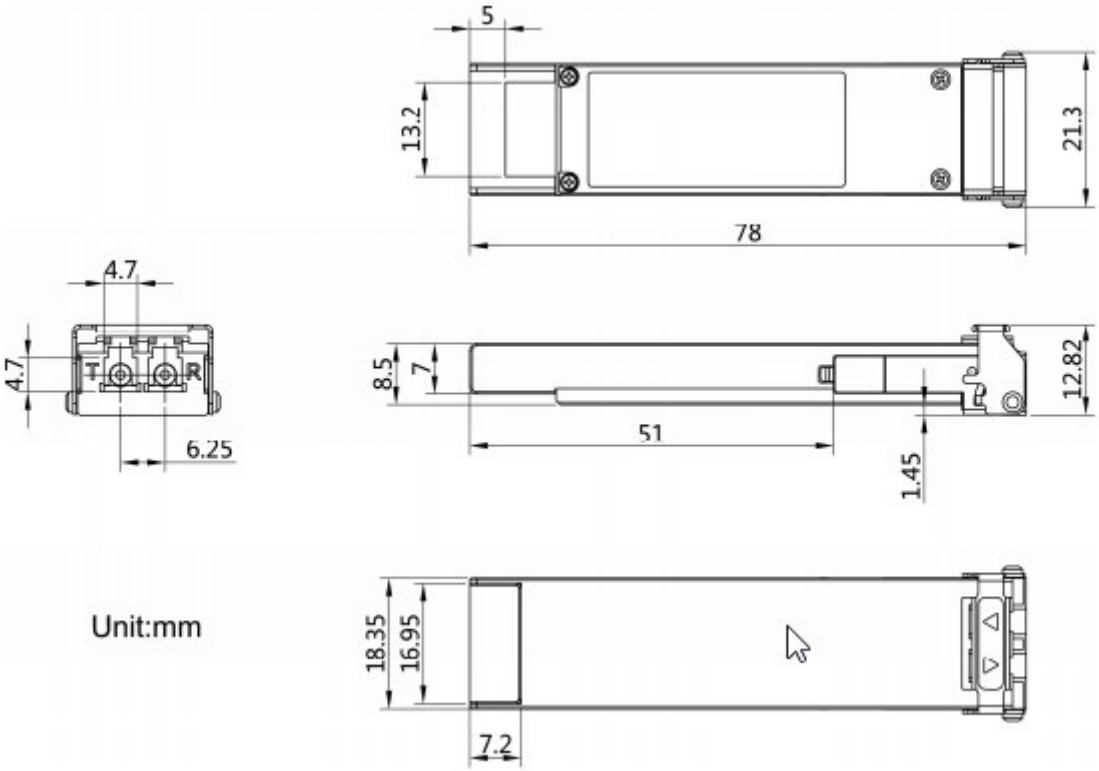

About ProLabs

Our extensive experience comes as standard. For over 20 years ProLabs has delivered optical connectivity solutions that give our customers freedom and choice through our ability to provide seamless interoperability. At the heart of our company is the ability to provide state-of-the-art optical transport and connectivity solutions that are compatible with more than 100 optical switching and transport platforms.

A Complete Portfolio of Network Solutions

ProLabs is focused on innovations in optical transport and connectivity. The combination of our knowledge of optics and networking equipment enables ProLabs to be your single source for optical transport and connectivity solutions from 100Mb to 1.6T while providing innovative solutions that increase network efficiency. We provide the optical connectivity expertise that is compatible with and enhances your switching and transport equipment.

The Trusted Partner

Customer service is our number one value. ProLabs has invested in people, labs and manufacturing capacity to ensure compatible products, and immediate answers to your questions. With Engineering and Manufacturing offices in the U.K. and U.S. augmented by field offices throughout the U.S., U.K. and Asia, ProLabs is able to be our customers best advocate 24 hours a day.

Contact Information

ProLabs US

Email: sales@prolabs.com
Telephone: 952-852-0252

ProLabs UK

Email: salessupport@prolabs.com
Telephone: +44 1285 719 600