XCVR-S80W31-AO

Ciena® XCVR-S80W31 Compatible TAA 10GBase-DWDM SFP+ Transceiver C-Band 100GHz (SMF, 1552.52nm, 80km, LC, DOM, -40 to 85C)

Features:

- SFF-8432 and SFF-8472 Compliance
- Temperature-stabilized EML transmitter and APD receiver
- Duplex LC Connector
- Industrial Temperature -40 to 85 Celsius
- Single-mode Fiber
- Hot Pluggable
- Excellent ESD Protection
- Metal with Lower EMI
- RoHS Compliant and Lead Free

Applications:

- 8x/10x Fibre Channel
- 10x Gigabit Ethernet over DWDM
- Access, Metro and Enterprise

Product Description

This Ciena® XCVR-S80W31 compatible SFP+ transceiver provides 10GBase-DWDM throughput up to 80km over single-mode fiber (SMF) using a wavelength of 1552.52nm via an LC connector. It is capable of withstanding rugged environments and can operate at temperatures between -40 and 85C. Our transceiver is built to meet or exceed OEM specifications and is guaranteed to be 100% compatible with Ciena®. It has been programmed, uniquely serialized, and tested for data-traffic and application to ensure that it will initialize and perform identically. All of our transceivers comply with Multi-Source Agreement (MSA) standards to provide seamless network integration. Additional product features include Digital Optical Monitoring (DOM) support which allows access to real-time operating parameters. This transceiver is Trade Agreements Act (TAA) compliant. We stand behind the quality of our products and proudly offer a limited lifetime warranty.

AddOn's transceivers are RoHS compliant and lead-free.

TAA refers to the Trade Agreements Act (19 U.S.C. & 2501-2581), which is intended to foster fair and open international trade. TAA requires that the U.S. Government may acquire only "U.S.-made or designated country end products."

TAA COMPLIANT

Rev. 082426

Wavelength Guide (100GHz ITU-T Channel)

ITU Channel #	Frequency (THZ)	Center Wavelength (nm)
61	196.1	1528.77
60	196.0	1529.55
59	195.9	1530.33
58	195.8	1531.12
57	195.7	1531.90
56	195.6	1532.68
55	195.5	1533.47
54	195.4	1534.25
53	195.3	1535.04
52	195.2	1535.82
51	195.1	1536.61
50	195.0	1537.40
49	194.9	1538.19
48	194.8	1538.98
47	194.7	1539.77
46	194.6	1540.56
45	194.5	1541.35
44	194.4	1542.14
43	194.3	1542.94
42	194.2	1543.73
41	194.1	1544.53
40	194.0	1545.32
39	193.9	1546.12
38	193.8	1546.92
37	193.7	1547.72
36	193.6	1548.51
35	193.5	1549.32
34	193.4	1550.12
33	193.3	1550.92
32	193.2	1551.72
31	193.1	1552.52
30	193.0	1553.33
29	192.9	1554.13
28	192.8	1554.94
27	192.7	1555.75
26	192.6	1556.55
25	192.5	1557.36
24	192.4	1558.17
23	192.3	1558.98
22	192.2	1559.79
21	192.1	1560.61
20	192.0	1561.42

19	191.9	1562.23
18	191.8	1563.05
17	191.7	1563.86

Absolute Maximum Ratings

Parameter	Symbol	Min.	Typ.	Max.	Unit	Notes
Maximum Supply Voltage	Vcc	0.5		4.0	V	
Storage Temperature	Tstg	-40		+85	°C	1
Operating Case Temperature	Tc	-40		+85	°C	
Data Rate	BR	1.2	10.3125	11.3	Gbps	2
Bit Error Rate	BER			10^{-12}		
Supply Current	Icc		450	500	mA	3

Notes:

1. Ambient temperature.
2. IEEE 802.3ae.
3. For electrical power interface.

Electrical Characteristics Vcc=3.4 to 3.46V, Tc

Parameter	Symbol	Min.	Typ.	Max.	Unit	Notes
Input Voltage	Vcc	3.14	3.3	3.46	V	
Power Consumption	P_D			1.5	W	
Transmitter						
Differential Input Impedance	ZIN		100		Ω	
Differential Data Input Swing	VIN,pp	300		850	mV	
Transmit Enable voltage	V_D	2		Vcc	V	
Transmit Enable voltage	V_{EN}	VeeT		VeeT + 0.8	V	
Receiver						
Differential Data Output Swing	VOUT_pp	300		850	mV	
Data Output Rise/Fall Time (20%-80%)	Tr/Tf	28			ps	
LOS Asserted	LOSA	2		Host_Vcc	V	
LOS De-Asserted	LOSD	VeeR		VeeR+ 0.5	V	

Notes:

1. For electrical power interface.

Optical Characteristics

Parameter	Symbol	Min	Typ.	Max	Unit	Notes
Transmitter						
Optical Power	PTX	0		4	dBm	1
Optical Wavelength	λ	λ-0.1	λ	λ+0.1	nm	2
Extinction Ratio	ER	9			dB	
Spectral Width (-20dB)	Δλ			0.6	nm	
Side Mode Suppression Ratio	SMSR	30			dB	
Relative Intensity Noise	RIN			-128	dB/Hz	
Transmitter Dispersion Penalty	TDP			3.2	dB	
Launch Power of OFF Transmitter	Poff			-30	dBm	1
Receiver						
Optical Center Wavelength	λc	1260		1620	nm	
Average Receive Power	P_{RX}	-24		-7	dBm	
Receiver Sensitivity @ 10.3 GBps	PX_SEN			-24	dBm	3
Receiver Reflectance	TR_{RX}			-27	dB	
LOS Assert	LOSA	-35			dB	
LOS De-assert	LOSD			-27	dB	
LOS Hysteresis	LOSH	0.5			dB	

Notes:

1. Average.
2. λ = specified ITU Grid wavelength.
3. Measured with PRBS 2^{31}-1 test mode, BER<10^{-12}.

Pin Descriptions

Pin	Symbol	Name/Descriptions	Ref.
1	VeeT	Transmitter Ground (Common with Receiver Ground).	1
2	TX_Fault	Transmitter Fault.	
3	TX_Disable	Transmitter Disable. Laser output disabled on “high” or “open.”	2
4	SDA	2-Wire Serial Interface Data.	3
5	SCL	2-Wire Serial Interface Clock.	3
6	MOD_ABS	Module Absent. Grounded within the module.	3
7	RS0	Rate Select 0. Not used.	
8	LOS	Loss of Signal indication. “Logic 0” indicates normal operation.	4
9	RS1	Rate Select 1. Not used.	1
10	VeeR	Receiver Ground (Common with Transmitter Ground).	1
11	VeeR	Receiver Ground (Common with Transmitter Ground).	1
12	RD-	Receiver Inverted Data out. AC Coupled.	
13	RD+	Receiver Non-inverted DATA out. AC Coupled.	
14	VeeR	Receiver Ground (Common with Transmitter Ground).	1
15	VccR	Receiver Power Supply.	
16	VccT	Transmitter Power Supply.	
17	VeeT	Transmitter Ground (Common with Receiver Ground).	1
18	TD+	Transmitter Non-Inverted Data In. AC Coupled.	
19	TD-	Transmitter Inverted Data In. AC Coupled.	
20	VeeT	Transmitter Ground (Common with Receiver Ground).	1

Notes:

1. Circuit ground is isolated form chassis ground.
2. Disable TDIS>2Vor open. Enable TDIS<0.8V.
3. Should be pulled up with 4.7kΩ-10KΩ on host board to a voltage between 2V and 3.46V.
4. LOS is open collector output.

Typical eye Diagram

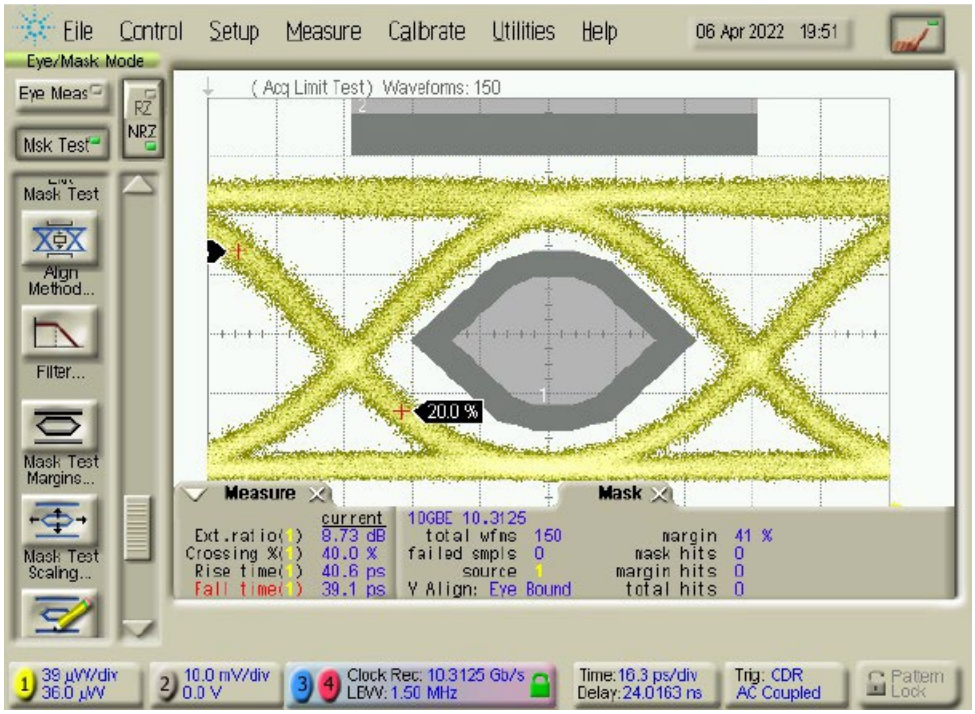

Block Diagram

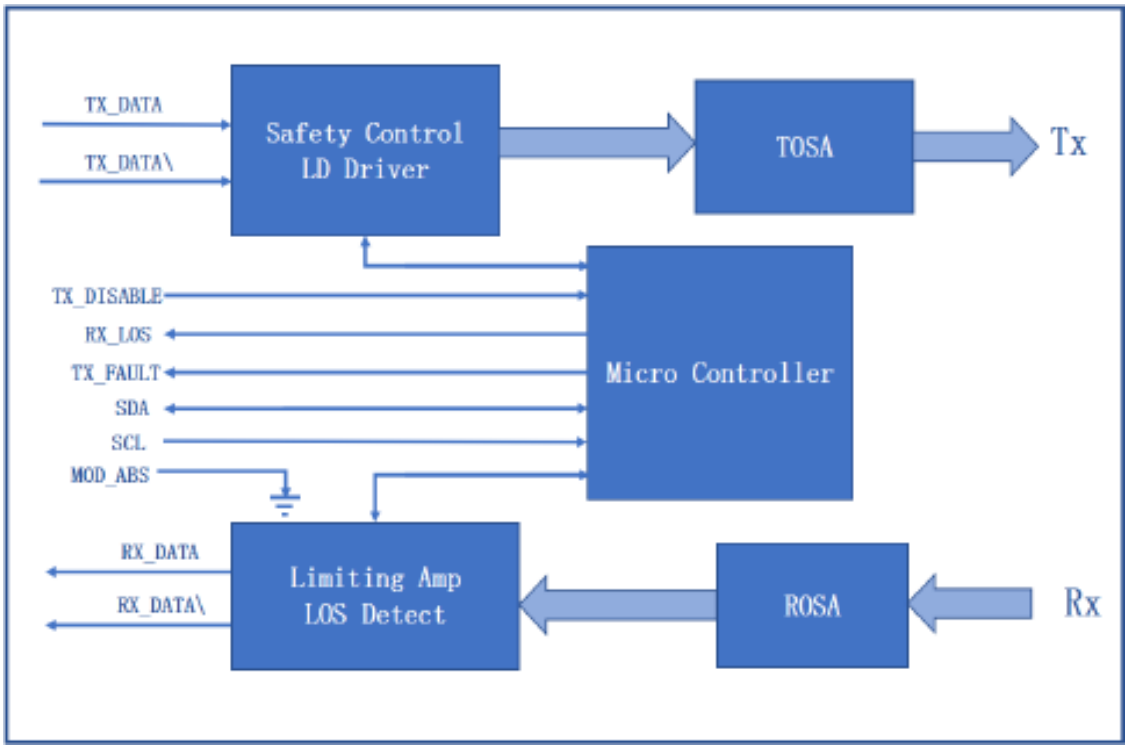

Electrical Pad Layout

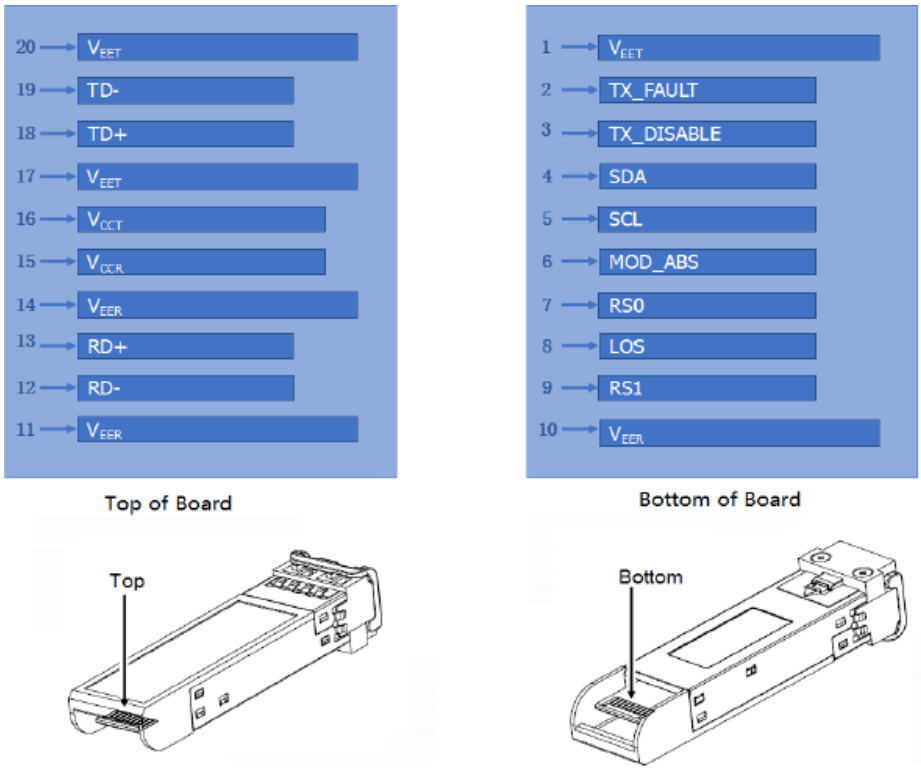

Mechanical Specifications

Module Weight: 16.5g

Dust Cap Weight: 0.95g

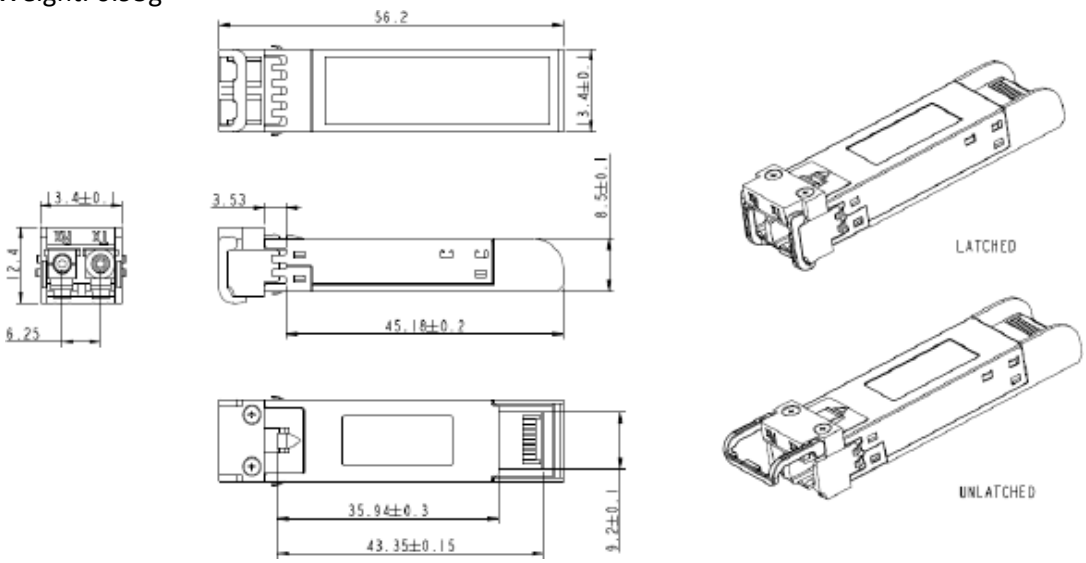

All Dimensions are ±0.2mm unless otherwise specified

About AddOn Networks

In 1999, AddOn Networks entered the market with a single product. Our founders fulfilled a severe shortage for compatible, cost-effective optical transceivers that compete at the same performance levels as leading OEM manufacturers. Adhering to the idea of redefining service and product quality not previously had in the fiber optic networking industry, AddOn invested resources in solution design, production, fulfillment, and global support.

Combining one of the most extensive and stringent testing processes in the industry, an exceptional free tech support center, and a consistent roll-out of innovative technologies, AddOn has continually set industry standards of quality and reliability throughout its history.

Reliability is the cornerstone of any optical fiber network and is ingrained in AddOn's DNA. It has played a key role in nurturing the long-term relationships developed over the years with customers. AddOn remains committed to exceeding industry standards with certifications ranging from NEBS Level 3 to ISO 9001:2015 with every new development while maintaining the signature reliability of its products.

U.S. Headquarters

Email: sales@addonnetworks.com

Telephone: +1 877.292.1701

Fax: 949.266.9273

Europe Headquarters

Email: salesemea@addonnetworks.com

Telephone: +44 1285 842070