XCVR-S80V55-100-CW49-AO

Ciena® XCVR-S80V55-100-CW49 Compatible TAA 10GBase-CWDM SFP+ Transceiver (SMF, 1490nm, 100km, LC, DOM)

Features

- SFF-8432 and SFF-8472 Compliance
- Duplex LC Connector
- Commercial Temperature 0 to 70 Celsius
- Single-mode Fiber
- Hot Pluggable
- Excellent ESD Protection
- Metal with Lower EMI
- RoHS Compliant and Lead Free

Applications

- 8x/10x Fibre Channel
- 10x Gigabit Ethernet over CWDM
- Access, Metro and Enterprise
- Mobile Fronthaul CPRI/OBSAI

Product Description

This Ciena® XCVR-S80V55-100-CW49 compatible SFP+ transceiver provides 10GBase-CWDM throughput up to 100km over single-mode fiber (SMF) using a wavelength of 1490nm via an LC connector. It is guaranteed to be 100% compatible with the equivalent Ciena® transceiver. This easy to install, hot swappable transceiver has been programmed, uniquely serialized and data-traffic and application tested to ensure that it will initialize and perform identically. Digital optical monitoring (DOM) support is also present to allow access to real-time operating parameters. This transceiver is Trade Agreements Act (TAA) compliant. We stand behind the quality of our products and proudly offer a limited lifetime warranty.

AddOn's transceivers are RoHS compliant and lead-free.

TAA refers to the Trade Agreements Act (19 U.S.C. & 2501-2581), which is intended to foster fair and open international trade. TAA requires that the U.S. Government may acquire only "U.S. – made or designated country end products."

Rev. 010622

Regulatory Compliance

- ESD to the Electrical PINs: compatible with MIL-STD-883E Method 3015.4
- ESD to the LC Receptacle: compatible with IEC 61000-4-3
- EMI/EMC compatible with FCC Part 15 Subpart B Rules, EN55022:2010
- Laser Eye Safety compatible with FDA 21CFR, EN60950-1& EN (IEC) 60825-1,2
- RoHS compliant with EU RoHS 2.0 directive 2015/863/EU

Absolute Maximum Ratings

Parameter	Symbol	Min.	Typical	Max.	Unit	Notes
Maximum Supply Voltage	V_{MAX}	-0.5		4	V	
Storage Temperature	T_{STO}	-40		85	°C	3
Operating Temperature	Tc	0		70	°C	2
Data Rate	DR	1.2		11.3	Gb/s	1
Bit Error Rate	BER			10^{-12}		

Notes:

1. IEEE 802.3ae
2. Case temperature
3. Ambient temperature

Electrical Characteristics (TOP=25°C, Vcc=3.3 Volts)

Parameter	Symbol	Min.	Typ.	Max.	Unit	Notes
Power Supply Voltage	Vcc	3.14	3.3	3.46	V	
Power Supply Current	Icc		450	500	mA	
Transmitter						
Input Differential Impedance	R_{IN}	100		2200	Ω	
Differential data input swing	$V_{IN\ PP}$	120		850	mV	
Transmit Disable Voltage	V_D	2		V_{CC}	V	
Transmit Enable Voltage	V_{EN}	V_{EE}		V_{EE}+0.8	V	
Receiver						
Differential data output swing	$V_{OUT\ PP}$	300		850	mV	
Data output rise time/fall time (20%-80%)	t_r/t_f	28			ps	
LOS Fault	$V_{LOS\ A}$	2		$V_{CC\ HOST}$	V	
LOS Normal	$V_{LOS\ D}$	V_{EE}		V_{EE}+0.5	V	

Optical Characteristics

Parameter	Symbol	Min.	Typ.	Max.	Unit	Notes
Transmitter						
Output Optical Power	P_{TX}	0		4	dBm	1
Optical Center Wavelength – 1550nm	λc	1545	1551	1557	Nm	
Extinction Ratio	EX	9			dB	
Spectral Width (-20dB)	Δλ			.06	nm	
Side Mode Suppression Ratio	SMSR	30			dB	
Relative Intensity Noise	RIN			-128	dB/Hz	
Transmitter Dispersion Penalty	TDP			4	dB	
Total Jitter						2
Launch Power of OFF Transmitter	P_{OUT_OFF}			-30	dBm	1
Receiver						
Optical Center Wavelength	λ_C	1260		1620	nm	
Average Receiver Power	P_{RX}	-23		-8	dBm	
Receiver Sensitivity @10.3Gb/s	R_{X_SEN}			-2	dBm	3
Receiver Reflectance	TR_{RX}			-27	dB	
LOS Assert	LOS_A	-35			dBm	
LOS De- Assert	LOS_D			-27	dBm	
LOS Hysteresis	LOS_H	0.5			dB	

Notes:

1. Average
2. According to IEEE 802.3ae requirement
3. Measured with the PRBS 2^{31}-1 test mode. BER<10^{-12}

Pin Descriptions

Pin	Symbol	Name/Descriptions	Ref.
1	V_{EET}	Transmitter ground (common with receiver ground)	1
2	TX_FAULT	Transmitter Fault	
3	TX DISABLE	Transmitter Disable. Laser output disabled on high or open	2
4	SDA	2-wire Serial Interface Data Line	3
5	SCL	2-wire Serial Interface Clock Line	3
6	MOD ABS	Module Absent. Grounded within the module	3
7	RS0	No connection required	
8	LOS	Loss of Signal indication. Logic 0 indicates normal operation	4
9	RS1	No connection required	1
10	V_{EER}	Receiver ground (common with transmitter ground)	1
11	V_{EER}	Receiver ground (common with transmitter ground)	1
12	RD–	Receiver Inverted DATA out. AC coupled	
13	RD+	Receiver Non-inverted DATA out. AC coupled	
14	V_{EER}	Receiver ground (common with transmitter ground)	1
15	V_{CCR}	Receiver power supply	
16	V_{CCT}	Transmitter power supply	
17	V_{EET}	Transmitter ground (common with receiver ground)	1
18	TD+	Transmitter Non-Inverted DATA in. AC coupled	
19	TD–	Transmitter Inverted DATA in. AC coupled	
20	V_{EET}	Transmitter ground (common with receiver ground)	1

Notes:

1. Circuit ground is isolated from Chassis ground.
2. Disabled: T_{DIS}>2V or open Enabled: T_{DIS}<0.8V
3. Should be pulled up with 4.7 – 10k ohm on host board to a voltage between 2V and 3.6V
4. LOS is open collector output.

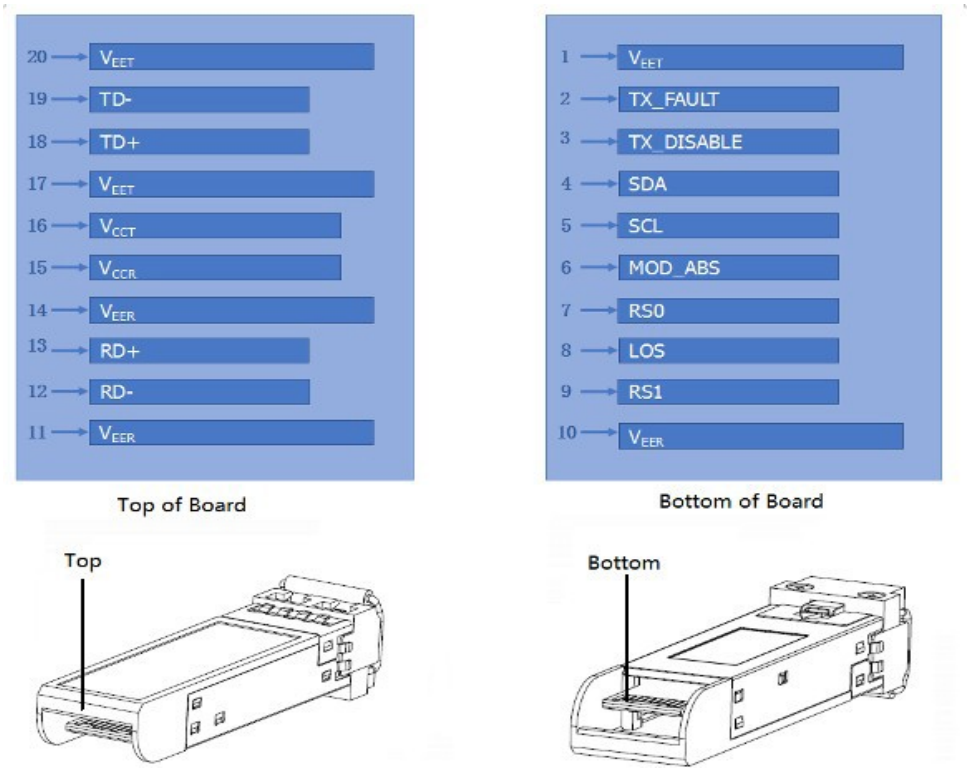

Pin-out of connector Block on Host board

Digital Diagnostic Memory Map

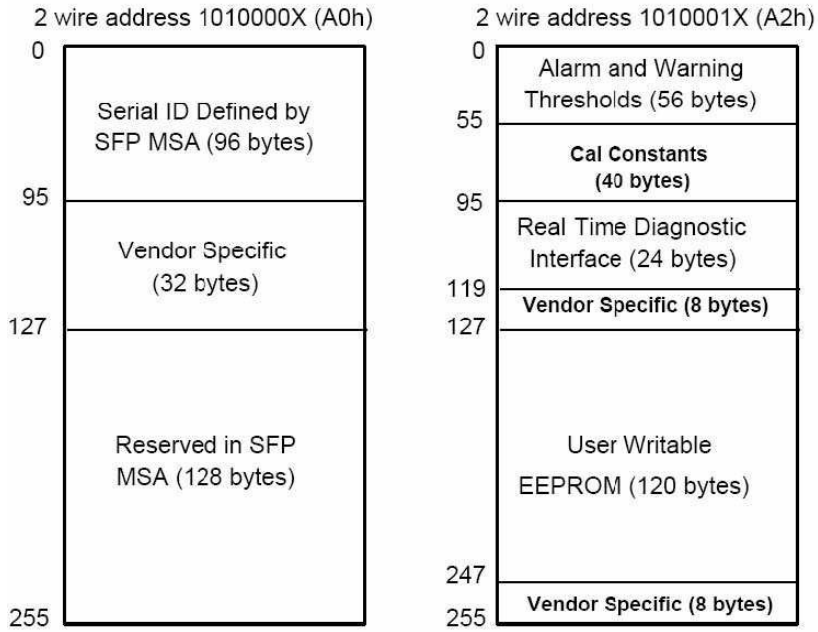

Required Host Board Components

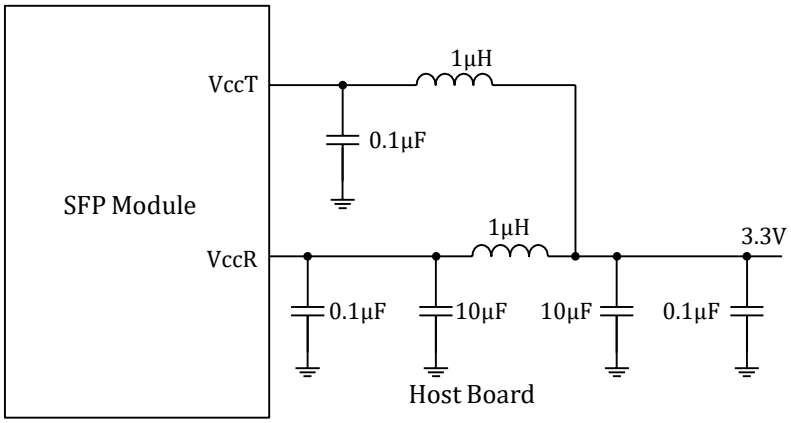

Recommended Application Interface Circuit

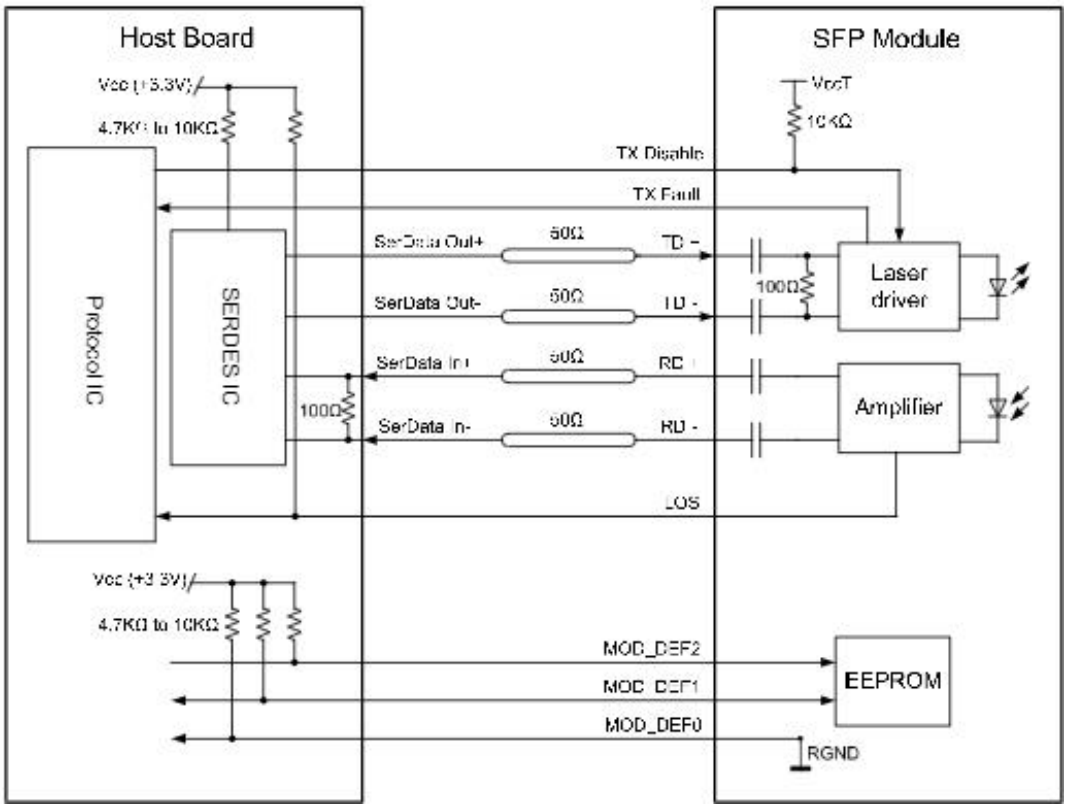

Mechanical Specifications

Small Form Factor Pluggable (SFP) transceivers are compatible with the dimensions defined by the SFP Multi-Sourcing Agreement (MSA).

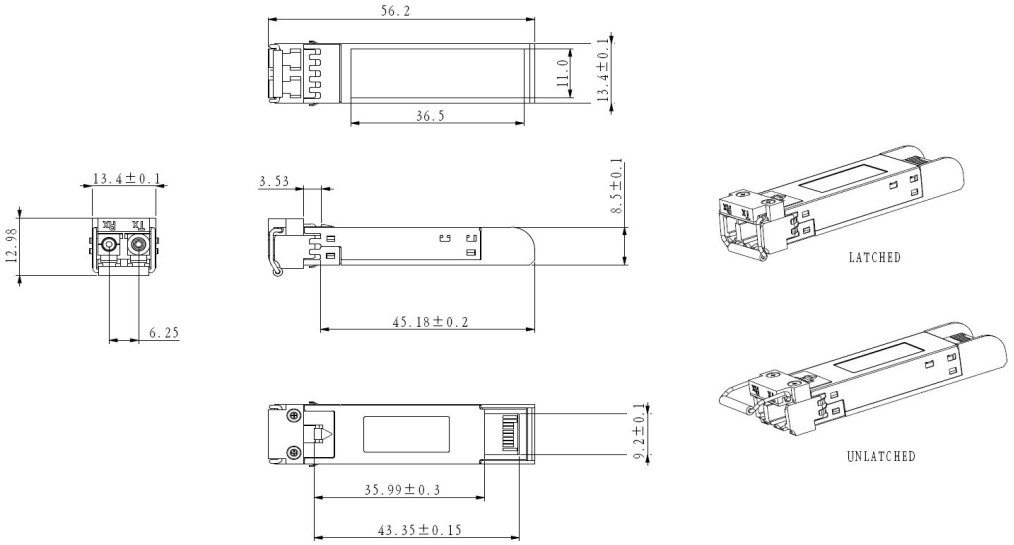

About AddOn Networks

In 1999, AddOn Networks entered the market with a single product. Our founders fulfilled a severe shortage for compatible, cost-effective optical transceivers that compete at the same performance levels as leading OEM manufacturers. Adhering to the idea of redefining service and product quality not previously had in the fiber optic networking industry, AddOn invested resources in solution design, production, fulfillment, and global support.

Combining one of the most extensive and stringent testing processes in the industry, an exceptional free tech support center, and a consistent roll-out of innovative technologies, AddOn has continually set industry standards of quality and reliability throughout its history.

Reliability is the cornerstone of any optical fiber network and is in engrained in AddOn's DNA. It has played a key role in nurturing the long-term relationships developed over the years with customers. AddOn remains committed to exceeding industry standards with certifications from ranging from NEBS Level 3 to ISO 9001:2005 with every new development while maintaining the signature reliability of its products.

U.S. Headquarters

Email: sales@addonnetworks.com

Telephone: +1 877.292.1701

Fax: 949.266.9273

Europe Headquarters

Email: salessupportemea@addonnetworks.com

Telephone: +44 1285 842070