**XCVR-S80V55-DW22-AO**

Ciena® XCVR-S80V55-DW22 Compatible TAA 10GBase-DWDM SFP+ Transceiver C-Band 100GHz (SMF, 1559.79nm, 80km, LC, DOM, -40 to 85C)

**Features:**

- SFF-8432 and SFF-8472 Compliance
- Temperature-stabilized EML transmitter and APD receiver
- Duplex LC Connector
- Industrial Temperature -40 to 85 Celsius
- Single-mode Fiber
- Hot Pluggable
- Excellent ESD Protection
- Metal with Lower EMI
- RoHS Compliant and Lead Free

**Applications:**

- 8x/10x Fibre Channel
- 10x Gigabit Ethernet over DWDM
- Access, Metro and Enterprise

**Product Description**

This Ciena® XCVR-S80V55-DW22 compatible SFP+ transceiver provides 10GBase-DWDM throughput up to 80km over single-mode fiber (SMF) using a wavelength of 1559.79nm via an LC connector. It is capable of withstanding rugged environments and can operate at temperatures between -40 and 85C. Our transceiver is built to meet or exceed OEM specifications and is guaranteed to be 100% compatible with Ciena®. It has been programmed, uniquely serialized, and tested for data-traffic and application to ensure that it will initialize and perform identically. All of our transceivers comply with Multi-Source Agreement (MSA) standards to provide seamless network integration. Additional product features include Digital Optical Monitoring (DOM) support which allows access to real-time operating parameters. This transceiver is Trade Agreements Act (TAA) compliant. We stand behind the quality of our products and proudly offer a limited lifetime warranty.

AddOn's transceivers are RoHS compliant and lead-free.

TAA refers to the Trade Agreements Act (19 U.S.C. & 2501-2581), which is intended to foster fair and open international trade. TAA requires that the U.S. Government may acquire only "U.S.-made or designated country end products."

TAA COMPLIANT

**Rev. 082426**

## Wavelength Guide (100GHz ITU-T Channel)

| ITU Channel # | Frequency (THZ) | Center Wavelength (nm) |
|---|---|---|
| **61** | 196.1 | 1528.77 |
| **60** | 196.0 | 1529.55 |
| **59** | 195.9 | 1530.33 |
| **58** | 195.8 | 1531.12 |
| **57** | 195.7 | 1531.90 |
| **56** | 195.6 | 1532.68 |
| **55** | 195.5 | 1533.47 |
| **54** | 195.4 | 1534.25 |
| **53** | 195.3 | 1535.04 |
| **52** | 195.2 | 1535.82 |
| **51** | 195.1 | 1536.61 |
| **50** | 195.0 | 1537.40 |
| **49** | 194.9 | 1538.19 |
| **48** | 194.8 | 1538.98 |
| **47** | 194.7 | 1539.77 |
| **46** | 194.6 | 1540.56 |
| **45** | 194.5 | 1541.35 |
| **44** | 194.4 | 1542.14 |
| **43** | 194.3 | 1542.94 |
| **42** | 194.2 | 1543.73 |
| **41** | 194.1 | 1544.53 |
| **40** | 194.0 | 1545.32 |
| **39** | 193.9 | 1546.12 |
| **38** | 193.8 | 1546.92 |
| **37** | 193.7 | 1547.72 |
| **36** | 193.6 | 1548.51 |
| **35** | 193.5 | 1549.32 |
| **34** | 193.4 | 1550.12 |
| **33** | 193.3 | 1550.92 |
| **32** | 193.2 | 1551.72 |
| **31** | 193.1 | 1552.52 |
| **30** | 193.0 | 1553.33 |
| **29** | 192.9 | 1554.13 |
| **28** | 192.8 | 1554.94 |
| **27** | 192.7 | 1555.75 |
| **26** | 192.6 | 1556.55 |
| **25** | 192.5 | 1557.36 |
| **24** | 192.4 | 1558.17 |
| **23** | 192.3 | 1558.98 |
| **22** | 192.2 | 1559.79 |
| **21** | 192.1 | 1560.61 |
| **20** | 192.0 | 1561.42 |

| | | |
|---|---|---|
| **19** | 191.9 | 1562.23 |
| **18** | 191.8 | 1563.05 |
| **17** | 191.7 | 1563.86 |

### Absolute Maximum Ratings

| Parameter | Symbol | Min. | Typ. | Max. | Unit | Notes |
|---|---|---|---|---|---|---|
| **Maximum Supply Voltage** | Vcc | 0.5 | | 4.0 | V | |
| **Storage Temperature** | Tstg | -40 | | +85 | °C | 1 |
| **Operating Case Temperature** | Tc | -40 | | +85 | °C | |
| **Data Rate** | BR | 1.2 | 10.3125 | 11.3 | Gbps | 2 |
| **Bit Error Rate** | BER | | | $10^{-12}$ | | |
| **Supply Current** | Icc | | 450 | 500 | mA | 3 |

**Notes:**

1. Ambient temperature.
2. IEEE 802.3ae.
3. For electrical power interface.

### Electrical Characteristics Vcc=3.4 to 3.46V, Tc

| Parameter | Symbol | Min. | Typ. | Max. | Unit | Notes |
|---|---|---|---|---|---|---|
| **Input Voltage** | Vcc | 3.14 | 3.3 | 3.46 | V | |
| **Power Consumption** | $P_D$ | | | 1.5 | W | |
| **Transmitter** | | | | | | |
| **Differential Input Impedance** | ZIN | | 100 | | Ω | |
| **Differential Data Input Swing** | VIN,pp | 300 | | 850 | mV | |
| **Transmit Enable voltage** | $V_D$ | 2 | | Vcc | V | |
| **Transmit Enable voltage** | $V_{EN}$ | VeeT | | VeeT + 0.8 | V | |
| **Receiver** | | | | | | |
| **Differential Data Output Swing** | VOUT_pp | 300 | | 850 | mV | |
| **Data Output Rise/Fall Time (20%-80%)** | Tr/Tf | 28 | | | ps | |
| **LOS Asserted** | LOSA | 2 | | Host_Vcc | V | |
| **LOS De-Asserted** | LOSD | VeeR | | VeeR+ 0.5 | V | |

**Notes:**

1. For electrical power interface.

## Optical Characteristics

| Parameter | Symbol | Min | Typ. | Max | Unit | Notes |
|---|---|---|---|---|---|---|
| **Transmitter** | | | | | | |
| **Optical Power** | PTX | 0 | | 4 | dBm | 1 |
| **Optical Wavelength** | λ | λ-0.1 | λ | λ+0.1 | nm | 2 |
| **Extinction Ratio** | ER | 9 | | | dB | |
| **Spectral Width (-20dB)** | Δλ | | | 0.6 | nm | |
| **Side Mode Suppression Ratio** | SMSR | 30 | | | dB | |
| **Relative Intensity Noise** | RIN | | | -128 | dB/Hz | |
| **Transmitter Dispersion Penalty** | TDP | | | 3.2 | dB | |
| **Launch Power of OFF Transmitter** | Poff | | | -30 | dBm | 1 |
| **Receiver** | | | | | | |
| **Optical Center Wavelength** | λc | 1260 | | 1620 | nm | |
| **Average Receive Power** | $P_{RX}$ | -24 | | -7 | dBm | |
| **Receiver Sensitivity @ 10.3 GBps** | PX_SEN | | | -24 | dBm | 3 |
| **Receiver Reflectance** | $TR_{RX}$ | | | -27 | dB | |
| **LOS Assert** | LOSA | -35 | | | dB | |
| **LOS De-assert** | LOSD | | | -27 | dB | |
| **LOS Hysteresis** | LOSH | 0.5 | | | dB | |

**Notes:**

1. Average.
2. λ = specified ITU Grid wavelength.
3. Measured with PRBS $2^{31}$-1 test mode, BER<$10^{-12}$.

**Pin Descriptions**

| Pin | Symbol | Name/Descriptions | Ref. |
|---|---|---|---|
| **1** | VeeT | Transmitter Ground (Common with Receiver Ground). | 1 |
| **2** | TX_Fault | Transmitter Fault. | |
| **3** | TX_Disable | Transmitter Disable. Laser output disabled on “high” or “open.” | 2 |
| **4** | SDA | 2-Wire Serial Interface Data. | 3 |
| **5** | SCL | 2-Wire Serial Interface Clock. | 3 |
| **6** | MOD_ABS | Module Absent. Grounded within the module. | 3 |
| **7** | RS0 | Rate Select 0. Not used. | |
| **8** | LOS | Loss of Signal indication. “Logic 0” indicates normal operation. | 4 |
| **9** | RS1 | Rate Select 1. Not used. | 1 |
| **10** | VeeR | Receiver Ground (Common with Transmitter Ground). | 1 |
| **11** | VeeR | Receiver Ground (Common with Transmitter Ground). | 1 |
| **12** | RD- | Receiver Inverted Data out. AC Coupled. | |
| **13** | RD+ | Receiver Non-inverted DATA out. AC Coupled. | |
| **14** | VeeR | Receiver Ground (Common with Transmitter Ground). | 1 |
| **15** | VccR | Receiver Power Supply. | |
| **16** | VccT | Transmitter Power Supply. | |
| **17** | VeeT | Transmitter Ground (Common with Receiver Ground). | 1 |
| **18** | TD+ | Transmitter Non-Inverted Data In. AC Coupled. | |
| **19** | TD- | Transmitter Inverted Data In. AC Coupled. | |
| **20** | VeeT | Transmitter Ground (Common with Receiver Ground). | 1 |

**Notes:**

1. Circuit ground is isolated form chassis ground.
2. Disable TDIS>2Vor open. Enable TDIS<0.8V.
3. Should be pulled up with 4.7kΩ-10KΩ on host board to a voltage between 2V and 3.46V.
4. LOS is open collector output.

**Typical eye Diagram**

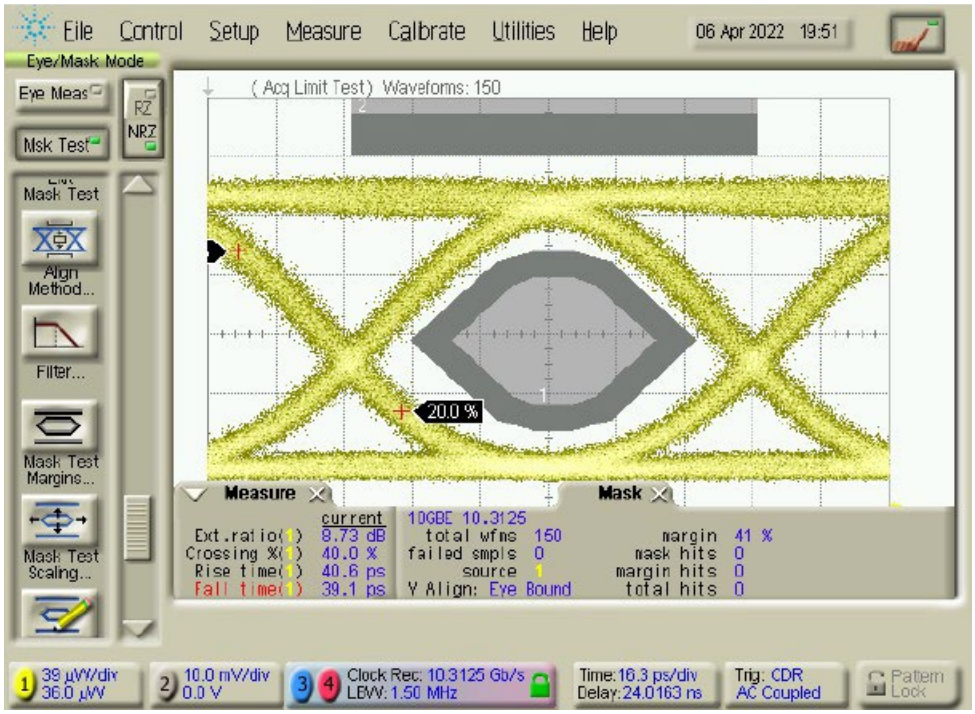


**Block Diagram**

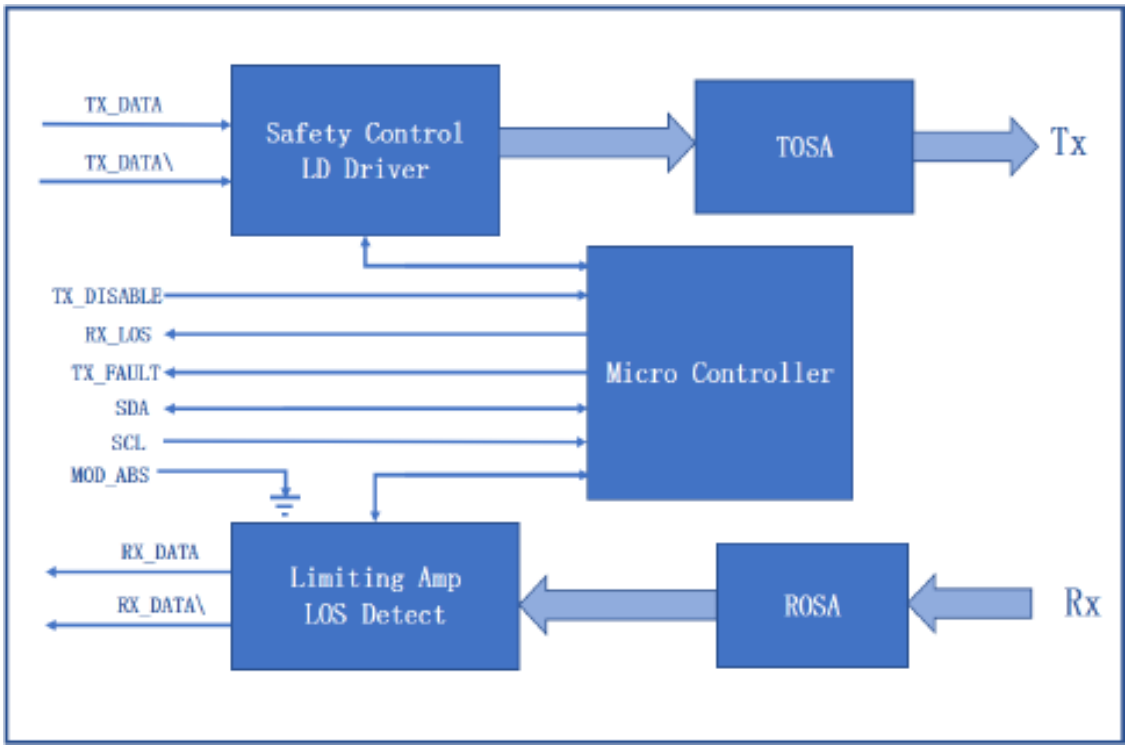

**Electrical Pad Layout**

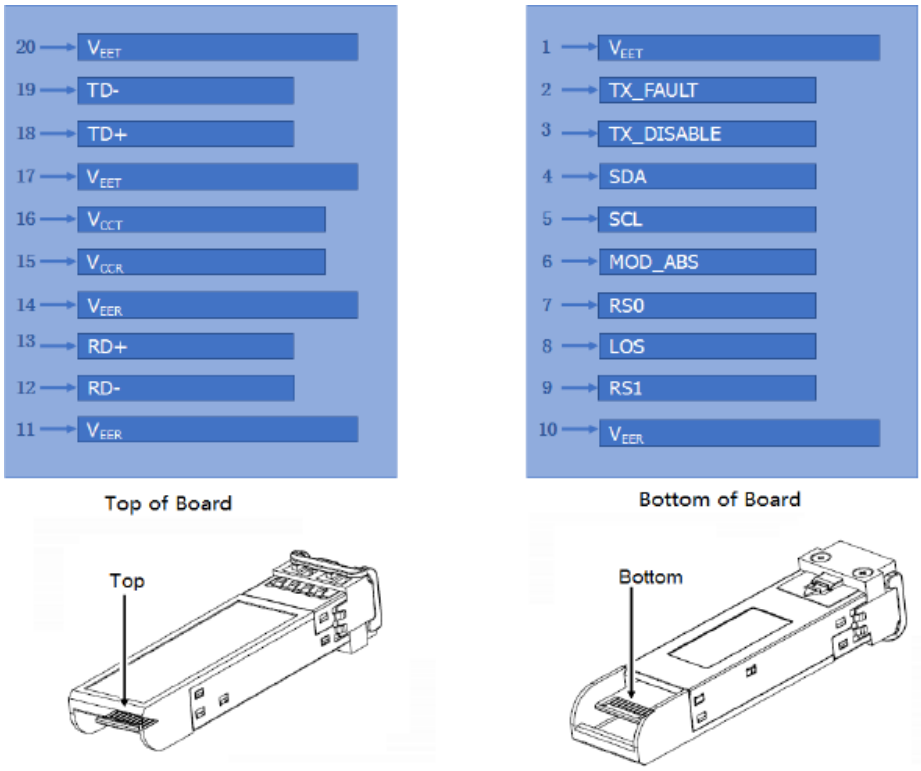


**Mechanical Specifications**

Module Weight: 16.5g

Dust Cap Weight: 0.95g

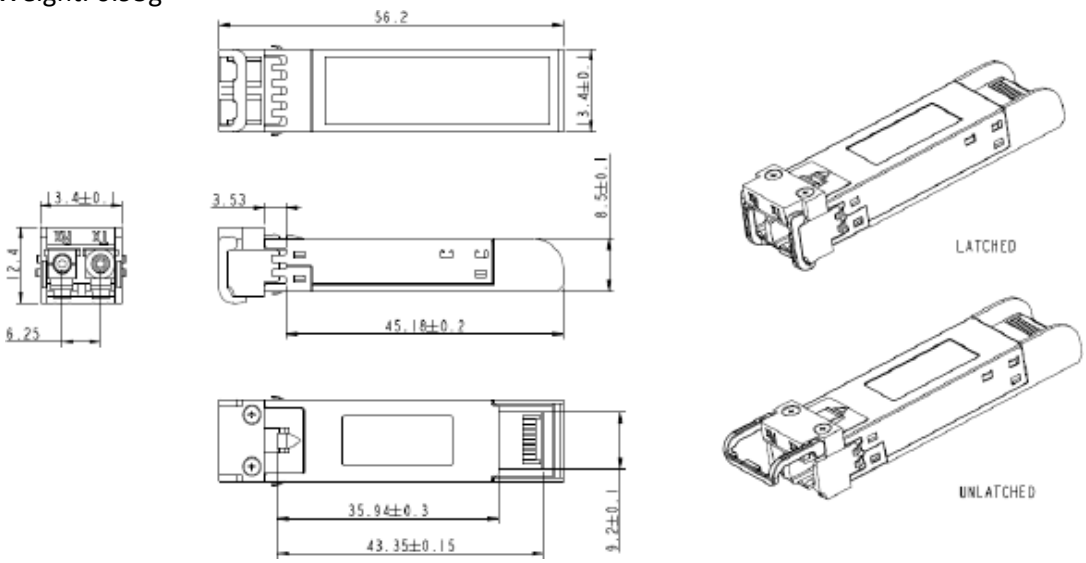


All Dimensions are ±0.2mm unless otherwise specified

**About AddOn Networks**

In 1999, AddOn Networks entered the market with a single product. Our founders fulfilled a severe shortage for compatible, cost-effective optical transceivers that compete at the same performance levels as leading OEM manufacturers. Adhering to the idea of redefining service and product quality not previously had in the fiber optic networking industry, AddOn invested resources in solution design, production, fulfillment, and global support.

Combining one of the most extensive and stringent testing processes in the industry, an exceptional free tech support center, and a consistent roll-out of innovative technologies, AddOn has continually set industry standards of quality and reliability throughout its history.

Reliability is the cornerstone of any optical fiber network and is ingrained in AddOn's DNA. It has played a key role in nurturing the long-term relationships developed over the years with customers. AddOn remains committed to exceeding industry standards with certifications ranging from NEBS Level 3 to ISO 9001:2015 with every new development while maintaining the signature reliability of its products.


**U.S. Headquarters**

Email: sales@addonnetworks.com

Telephone: +1 877.292.1701

Fax: 949.266.9273

**Europe Headquarters**

Email: salesemea@addonnetworks.com

Telephone: +44 1285 842070