QSFP-OTU4-AOC2M-CN-C

Ciena® Compatible 100GBase-AOC QSFP28 to QSFP28 OTU4 Active Optical Cable (850nm, MMF, 2m)

Features

- Compliant to standard SFF-8636 QSFP28 active optical modules
- Compliant to 100GE/OTU4
- Automatic power down while broken cable is detected to improve eye safety
- Supports up to 4X28 Gbps bi-directional operation
- Low power consumption: less than 2.5W
- Reliable VCSEL and PIN photonic devices
- I2C standard management interface
- Excellent high speed signal integrity
- Commercial Temperature 0C to 70 Celsius
- RoHS compliant and lead-free

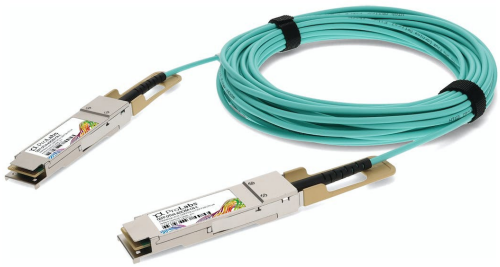

Applications

- 100GBASE Ethernet
- Proprietary high speed, high density data
- High performance computing, server and data storage

Product Description

This is a Ciena® Compatible 100GBase-AOC QSFP28 to QSFP28 OTU4 active optical cable that operates over multi-mode fiber with a maximum reach of 2.0m (6.6ft). At a wavelength of 850nm, it has been programmed, uniquely serialized, and data-traffic and application tested to ensure it is 100% compliant and functional. This active optical cable is TAA (Trade Agreements Act) compliant, and is built to comply with MSA (Multi-Source Agreement) standards. We stand behind the quality of our products and proudly offer a limited lifetime warranty.

ProLabs' active optical cables are RoHS compliant and lead-free.

TAA refers to the Trade Agreements Act (19 U.S.C. & 2501-2581), which is intended to foster fair and open international trade. TAA requires that the U.S. Government may acquire only "U.S. – made or designated country end products."

Absolute Maximum Ratings

Parameter	Symbol	Min	Typ.	Max.	Unit
Supply Voltage	Vcc	0		3.6	V
Relative Humidity	RH	5		85	%
Storage Temperature	Tstg	-40		85	°C
Operating Case Temperature	Tc	0	25	70	°C
Data Rate per Channel			4*25.78	4*27.95	Gbps

Electrical Characteristics

Parameter	Symbol	Min	Typ	Max	Unit	Notes
Supply Voltage	Vcc	3.135	3.3	3.465	V	
Supply Current	Icc			750	mA	
Power Dissipation	PD			2500	mW	
Clock Rate-I2C	f			400	kHz	1
Module Turn-on time				2000	ms	2

Notes:

1. For management interface.
2. Time from module power-on / insertion/ ResetL de-assert to module full functional.

Optical Characteristics

Parameter	Symbol	Min	Typ	Max	Unit	Notes
Transmitter						
Reference Differential Input Impedance	Zd		100		Ω	1
Optical Return Loss Tolerance				12	dB	
Differential Data Input Swing	Vin_pp	180		1200	mV	
Differential Data Input Threshold			50		mV	2
Receiver						
Reference Differential Input Impedance	Zd		100		Ω	3
Differential Data Output Swing	Vout_pp	0		800	mV	
Pre-emphasis Pulse Amplitude		0			%	4
Percentage		10			%	
		20			%	
		40			%	
Pre-emphasis Pulse Duration			30		ps	
Signal Speed			4*25.78	4*27.95	Gbps	5
Differential Data Output Swing		300		850	mV	
Differential Data Output Swing When Squelched				50	mV	
Rise / Fall Time (20% to 80%)		24			ps	
Receiver Overload (Pavg)	POL	2.5			dBm	
Damage Threshold	POL	3.4			dBm	

Notes:

1. AC coupled inside AOC module.
2. Input swing to trigger TX-squelch.
3. AC coupled inside AOC module.
4. User selectable. Percentage is the ratio of pre-emphasis amplitude to output swing. Users could change by writing to page 3 address 237, default value is “10.”
5. BER is 5.0E-5.

Pin Descriptions

Pin	Symbol	Description	Notes
1	GND	Transmitter Ground. Common with Receiver Ground.	1
2	Tx2-	Transmitter Inverted Data Input.	
3	Tx2+	Transmitter Non-Inverted Data output.	
4	GND	Transmitter Ground. Common with Receiver Ground.	1
5	Tx4-	Transmitter Inverted Data Input.	
6	Tx4+	Transmitter Non-Inverted Data output.	
7	GND	Transmitter Ground. Common with Receiver Ground.	1
8	ModSelL	Module Select.	2
9	ResetL	Module Reset.	2
10	VccRx	3.3V Power Supply Receiver.	
11	SCL	2-Wire serial Interface Clock.	2
12	SDA	2-Wire serial Interface Data.	2
13	GND	Transmitter Ground. Common with Receiver Ground.	1
14	Rx3+	Receiver Non-Inverted Data Output.	
15	Rx3-	Receiver Inverted Data Output.	
16	GND	Transmitter Ground. Common with Receiver Ground.	1
17	Rx1+	Receiver Non-Inverted Data Output.	
18	Rx1-	Receiver Inverted Data Output.	
19	GND	Transmitter Ground. Common with Receiver Ground.	1
20	GND	Transmitter Ground. Common with Receiver Ground.	1
21	Rx2-	Receiver Inverted Data Output.	
22	Rx2+	Receiver Non-Inverted Data Output.	
23	GND	Transmitter Ground. Common with Receiver Ground.	1
24	Rx4-	Receiver Inverted Data Output.	1
25	Rx4+	Receiver Non-Inverted Data Output.	
26	GND	Transmitter Ground. Common with Receiver Ground.	1
27	ModPrsl	Module Present.	
28	IntL	Interrupt.	2
29	VccTx	3.3V power supply transmitter.	
30	Vcc1	3.3V power supply.	
31	LPMode	Low Power Mode.	2
32	GND	Transmitter Ground. Common with Receiver Ground.	1
33	Tx3+	Transmitter Non-Inverted Data Input.	
34	Tx3-	Transmitter Inverted Data Output.	

35	GND	Transmitter Ground. Common with Receiver Ground.	1
36	Tx1+	Transmitter Non-Inverted Data Input.	
37	Tx1-	Transmitter Inverted Data Output.	
38	GND	Transmitter Ground. Common with Receiver Ground.	1

Note:

1. The module signal grounds are isolated from the module case.
2. This is an open collector/drain output that on the host board requires a 4.7kΩ to 10kΩ pull-up resistor to VccHost.

Electrical Pin-Out Details

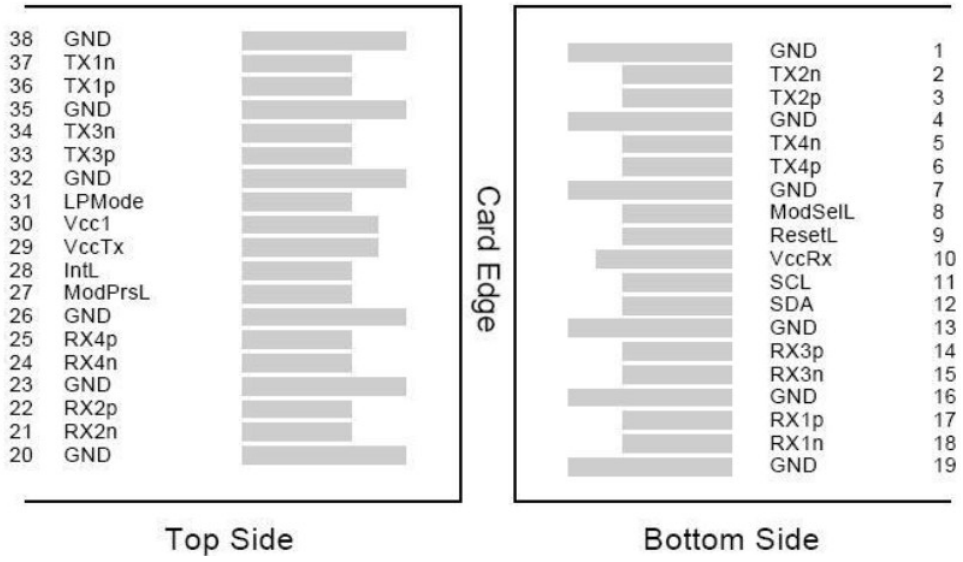

Recommended Application Interface Circuit

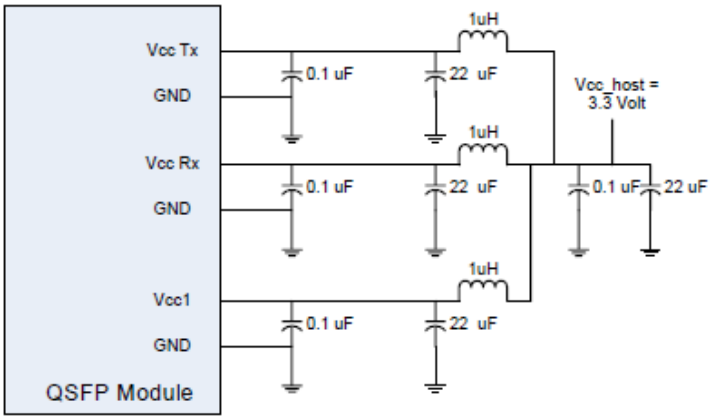

Mechanical Specifications

Parameter	Symbol	Min	Typ	Max	Unit	Notes
AOC cable length (L <=5m)	L	L-0.06	L	L+0.06	M	
AOC cable length (L > 5m)	L	L-(L*1.1%)	L	L+(L*1.1%)	M	
Module Retention		90		170	N	
Module Insertion		0		18	N	
Module Extraction		0		25	N	
Cable Pull Strength – Apply Load at 0°		44			N	
Cable Pull Strength – Apply Load at 90°		33			N	
Clearance Out of IO Bezel		75			nm	
Cable Bending Radius		3			cm	
Insertion / Removal Cycles		50			Cycles	

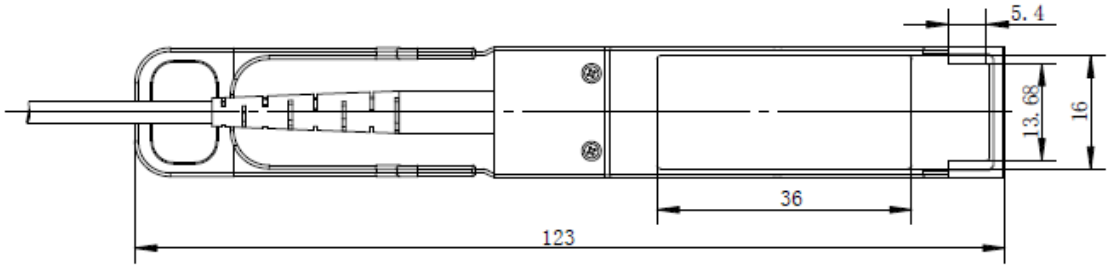

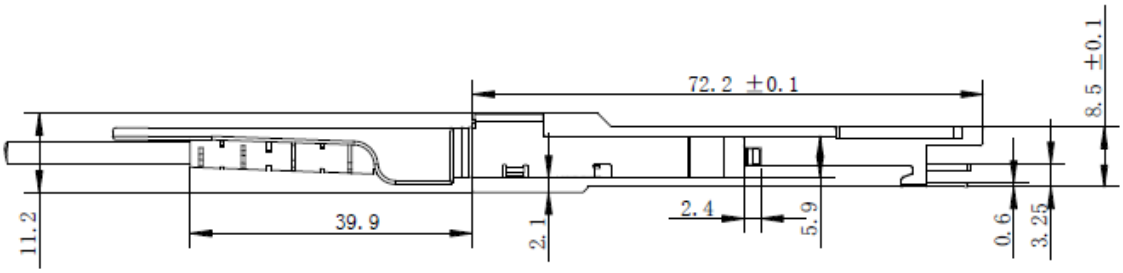

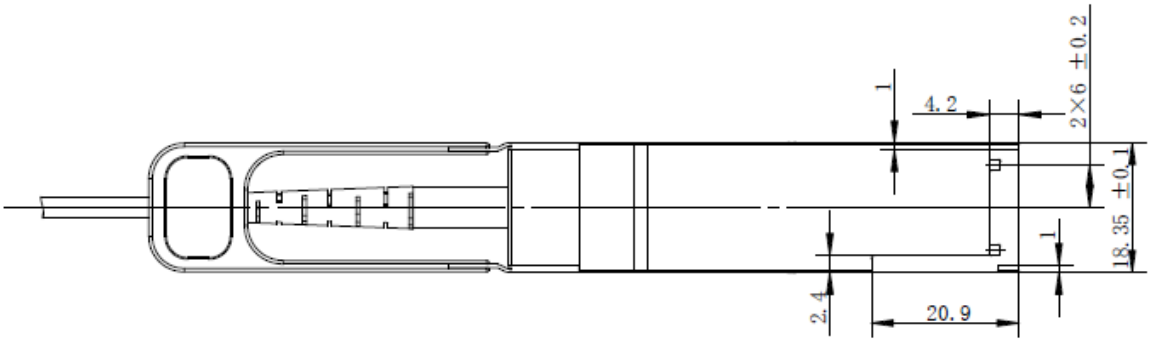

About ProLabs

Our experience comes as standard; for over 15 years ProLabs has delivered optical connectivity solutions that give our customers freedom and choice through our ability to provide seamless interoperability. At the heart of our company is the ability to provide state-of-the-art optical transport and connectivity solutions that are compatible with over 90 optical switching and transport platforms.

Complete Portfolio of Network Solutions

ProLabs is focused on innovations in optical transport and connectivity. The combination of our knowledge of optics and networking equipment enables ProLabs to be your single source for optical transport and connectivity solutions from 100Mb to 400G while providing innovative solutions that increase network efficiency. We provide the optical connectivity expertise that is compatible with and enhances your switching and transport equipment.

Trusted Partner

Customer service is our number one value. ProLabs has invested in people, labs and manufacturing capacity to ensure that you get immediate answers to your questions and compatible product when needed. With Engineering and Manufacturing offices in the U.K. and U.S. augmented by field offices throughout the U.S., U.K. and Asia, ProLabs is able to be our customers best advocate 24 hours a day.

Contact Information

ProLabs US

Email: sales@prolabs.com
Telephone: 952-852-0252

ProLabs UK

Email: salessupport@prolabs.com
Telephone: +44 1285 719 600