QSFP28-4SFP28-AOC3M-FT-AO

Fortinet® Compatible TAA 100GBase-AOC QSFP28 to 4xSFP28 Active Optical Cable (850nm, MMF, 3m)

Features:

- QSFP28 and SFP28 MSA Compliant
- Supports 103.1Gbps Aggregate Bit Rate
- Four Independent Full-Duplex Channels
- 25G Electrical Interface (OIF CEI-28G-VSR) for SFP28 Terminal
- Maximum Power Consumption of 2.5W for QSFP28 Terminal and 1.0W for Each SFP28 Terminal
- 4x25G Electrical Interface (OIF CEI-28G-VSR) for QSFP28 Terminal
- Operating Temperature: 0 to 70 Celsius
- Single Power Supply of 3.3V
- RoHS Compliant and Lead-Free

Applications:

- Infiniband EDR
- 100G Ethernet

Product Description

This is a Fortinet® compatible 100GBase-AOC QSFP28 to 4xSFP28 active optical cable that operates over multi-mode fiber with a maximum reach of 3.0m (9.8ft). At a wavelength of 850nm, it has been programmed, uniquely serialized, and data-traffic and application tested to ensure it is 100% compliant and functional. This active optical cable is TAA (Trade Agreements Act) compliant, and is built to comply with MSA (Multi-Source Agreement) standards. We stand behind the quality of our products and proudly offer a limited lifetime warranty.

AddOn's transceivers are RoHS compliant and lead-free.

TAA refers to the Trade Agreements Act (19 U.S.C. & 2501-2581), which is intended to foster fair and open international trade. TAA requires that the U.S. Government may acquire only "U.S.-made or designated country end products."

Rev. 082526

Absolute Maximum Ratings

Parameter	Symbol	Min.	Max.	Unit	Notes
Storage Temperature	Tstg	-40	85	˚C	
Operating Case Temperature	Tc	0	70	˚C	
Power Supply Voltage	Vcc	-0.5	3.6	V	
Relative Humidity	RH	0	85	%	1
Data Rate Accuracy		-100		100	ppm
Control Input Voltage - High		2		Vcc	V
Control Input Voltage - Low		0		0.8	V

Notes:

1. Non-condensing.

QSFP28 Electrical Characteristics

Parameter	Symbol / Test Point	Min.	Typ.	Max.	Unit	Notes
Power Consumption				2.5	W	
Data Rate Per Lane			25.781235			
Supply Current	Icc			757	mA	
Power Supply Voltage	Vcc	3.135	3.3	3.465		
Transmitter						
Overload Differential Voltage Pk-Pk	TP1a	900			mV	
Common-Mode Voltage (Vcm)	TP1	-350		2850	mV	1
Differential Termination Resistance Mismatch	TP1			10	%	2
Differential Return Loss (SDD11)	TP1			See CEI-28G-VSR Equation 13-19	dB	
Common-Mode to Differential Conversion and Differential to Common-Mode Conversion (SDC11, SCD11)	TP1			See CEI-28G-VSR Equation 13-20	dB	
Stressed Input Test	TP1a	See CEI-28G-VSR Section 13.3.11.2.1				
Receiver						
Differential Voltage Pk-Pk	TP4			900	mV	
Common-Mode Voltage (Vcm)	TP4	-350		2850	mV	1
Common-Mode Noise (RMS)	TP4			17.5	mV	
Differential Termination Resistance Mismatch	TP4			10	%	2
Common-Mode to Differential Conversion and Differential to Common-Mode Conversion (SDC22, SCD22)	TP4			See CEI-28G-VSR Equation 13		
Common-Mode Return Loss (SCC22)	TP4			-2	dB	3
Transition Time (20-80%)	TP4	9.5		5.5	dB	
Vertical Eye Closure (VEC)	TP4			5.5	dB	
Eye Width at 10^{-15} Probability (EW15)	TP4	0.57			UI	
Eye Width at 10^{-15} Probability (EH15)	TP4	228			mV	

Notes:

1. Vcm is generated by the host. Specification includes the effects of ground offset voltage.
2. At 1MHz.
3. From 250MHz to 30GHz.

SFP28 Electrical Characteristics

Parameter	Symbol / Test Point	Min.	Typ.	Max.	Unit	Notes
Power Consumption				1.0	W	1
Data Rate Per Lane			25.781235			
Supply Current	Icc			300	mA	1
Power Supply Voltage	Vcc	3.135	3.3	3.465		
Transmitter						
Overload Differential Voltage Pk-Pk	TP1a	900			mV	
Common-Mode Voltage (Vcm)	TP1	-350		2850	mV	2
Differential Termination Resistance Mismatch	TP1			10	%	3
Differential Return Loss (SDD11)	TP1			See CEI-28G-VSR Equation 13-19	dB	
Common-Mode to Differential Conversion and Differential to Common-Mode Conversion (SDC11, SCD11)	TP1			See CEI-28G-VSR Equation 13-20	dB	
Stressed Input Test	TP1a	See CEI-28G-VSR Section 13.3.11.2.1				
Receiver						
Differential Voltage Pk-Pk	TP4			900	mV	
Common-Mode Voltage (Vcm)	TP4	-350		2850	mV	2
Common-Mode Noise (RMS)	TP4			17.5	mV	3
Differential Termination Resistance Mismatch	TP4			10	%	
Differential Return Loss (SDD22)	TP4			See CEI-28G-VSR Equation 13-19		
Common-Mode to Differential Conversion and Differential to Common-Mode Conversion (SDC22, SCD22)	TP4			See CEI-28G-VSR Equation 13-21		
Common-Mode Return Loss (SCC22)	TP4			-2	dB	4
Transition Time (20-80%)	TP4	9.5		5.5	dB	
Vertical Eye Closure (VEC)	TP4			5.5	dB	
Eye Width at 10^{-15} Probability (EW15)	TP4	0.57			UI	
Eye Width at 10^{-15} Probability (EH15)	TP4	228			mV	

Notes:

1. Per terminal.
2. Vcm is generated by the host. Specification includes the effects of ground offset voltage.
3. At 1MHz.
4. From 250MHz to 30GHz.

QSFP28 Pin Descriptions

Pin	Logic	Symbol	Name/Description	Notes
1		GND	Module Ground.	1
2	CML-I	Tx2-	Transmitter Inverted Data Input.	
3	CML-I	Tx2+	Transmitter Non-Inverted Data Output.	
4		GND	Module Ground.	1
5	CML-I	Tx4-	Transmitter Inverted Data Input.	
6	CML-I	Tx4+	Transmitter Non-Inverted Data Output.	
7		GND	Module Ground.	1
8	LVTTL-I	ModSelL	Module Select.	
9	LVTTL-I	ResetL	Module Reset.	
10		VccRx	+3.3V Receiver Power Supply.	2
11	LVCMOS-I/O	SCL	2-Wire Serial Interface Clock.	
12	LVCMOS-I/O	SDA	2-Wire Serial Interface Data.	
13		GND	Module Ground.	
14	CML-O	Rx3+	Receiver Non-Inverted Data Output.	
15	CML-O	Rx3-	Receiver Inverted Data Output.	
16		GND	Module Ground.	1
17	CML-O	Rx1+	Receiver Non-Inverted Data Output.	
18	CML-O	Rx1-	Receiver Inverted Data Output.	
19		GND	Module Ground.	1
20		GND	Module Ground.	1
21	CML-O	Rx2-	Receiver Inverted Data Output.	
22	CML-O	Rx2+	Receiver Non-Inverted Data Output.	
23		GND	Module Ground.	1
24	CML-O	Rx4-	Receiver Inverted Data Output.	1
25	CML-O	Rx4+	Receiver Non-Inverted Data Output.	
26		GND	Module Ground.	1
27	LVTTL-O	ModPrsL	Module Present.	
28	LVTTL-O	IntL	Interrupt.	
29		VccTx	+3.3V Transmitter Power Supply.	2
30		Vcc1	+3.3V Power Supply.	2
31	LVTTL-I	LPMode	Low-Power Mode.	
32		GND	Module Ground.	1
33	CML-I	Tx3+	Transmitter Non-Inverted Data Input.	
34	CML-I	Tx3-	Transmitter Inverted Data Output.	

35		GND	Module Ground.	1
36	CML-I	Tx1+	Transmitter Non-Inverted Data Input.	
37	CML-I	Tx1-	Transmitter Inverted Data Output.	
38		GND	Module Ground.	1

Notes:

1. GND is the symbol for signal and supply (power) common for QSFP28 modules. All are common within the QSFP28 module, and all module voltages are referenced to this potential unless otherwise noted. Connect these directly to the host board signal common ground plane.
2. VccRx, Vcc1, and VccTx are the receiving and transmission power supplies and shall be applied concurrently. Recommended host board power supply filtering is shown below. VccRx, Vcc1, and VccTx may be internally connected within the QSFP28 transceiver module in any combination. The connector pins are each rated for a maximum current of 1000mA.

QSFP28 Connector

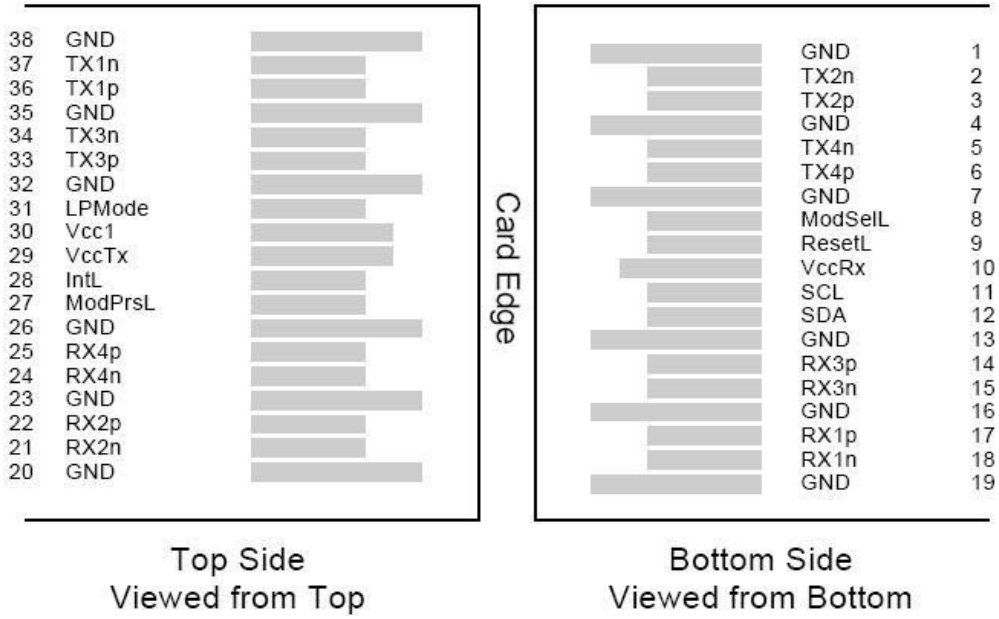

SFP28 Pin Descriptions

Pin	Logic	Symbol	Name/Description	Notes
1		VeeT	Module Transmitter Ground.	1
2	LVTTL-O	Tx_Fault	Module Transmitter Fault.	
3	LVTTL-I	Tx_Disable	Transmitter Disable. Turns off the transmitter's laser output.	
4	LVTTL-I/O	SDA	2-Wire Serial Interface Data.	2
5	LVTTL-I	SCL	2-Wire Serial Interface Clock.	2
6		MOD_DEF0	Module Definition 0. Grounded within the module.	
7	LVTTL-I	RS0	Receiver Rate Select.	
8	LVTTL-O	Rx_LOS	Receiver Loss of Signal Indication. Active LOW.	
9	LVTTL-I	RS1	Transmitter Rate Select. Not Used.	
10		VeeR	Module Receiver Ground.	1
11		VeeR	Module Receiver Ground.	1
12	CML-O	RD-	Receiver Inverted Data Output.	
13	CML-O	RD+	Receiver Data Output.	
14		VeeR	Module Receiver Ground.	1
15		VccR	Module Receiver +3.3V Supply.	
16		VccT	Module Receiver +3.3V Supply.	
17		VeeT	Module Transmitter Ground.	1
18	CML-I	TD+	Transmitter Non-Inverted Data Input.	
19	CML-I	TD-	Transmitter Inverted Data Input.	
20		VeeT	Module Transmitter Ground.	1

Notes:

1. Module ground pins (GND) are isolated from the module case.
2. Shall be pulled up with 4.7kΩ to 10kΩ to a voltage between 3.15V and 3.45V on the host board.

SFP28 Module Interface

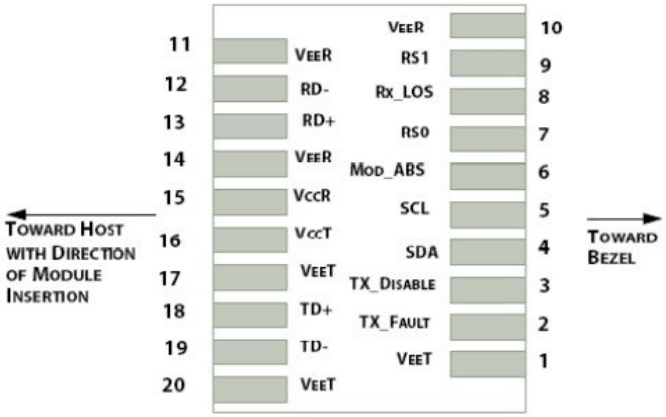

SFP28 Module Contact Assignment

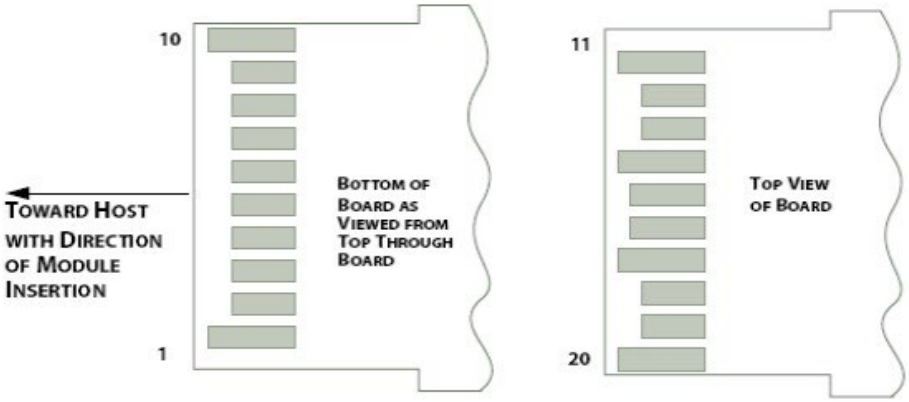

QSFP28 Recommended Power Supply

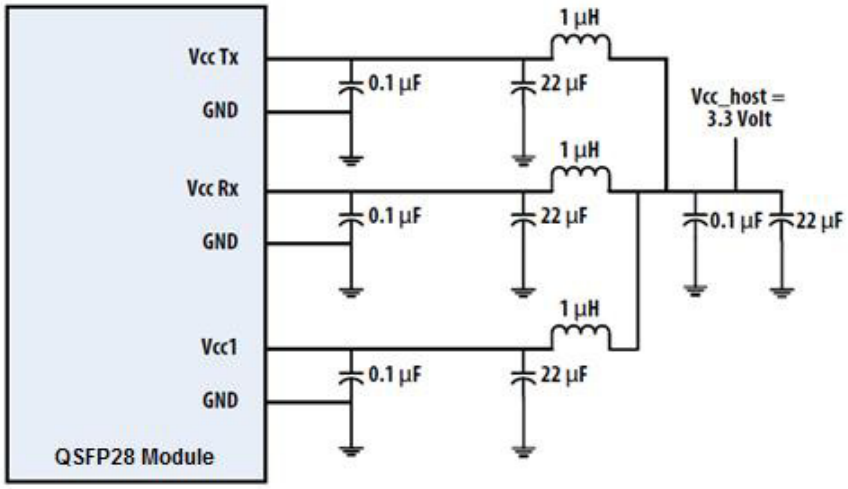

SFP28 Recommended Power Supply

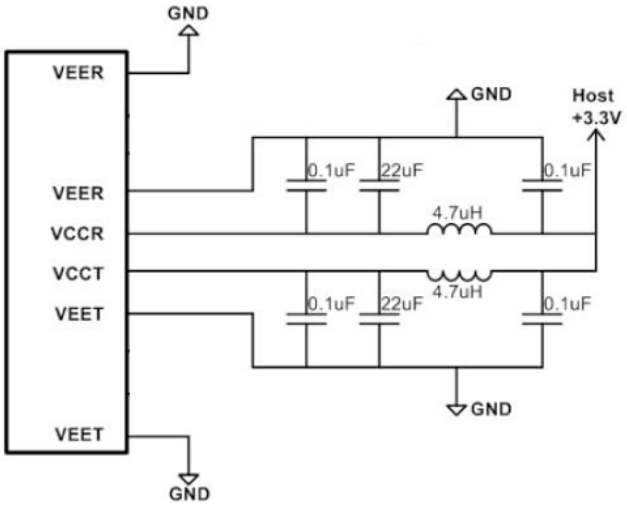

QSFP28 Mechanical Specifications

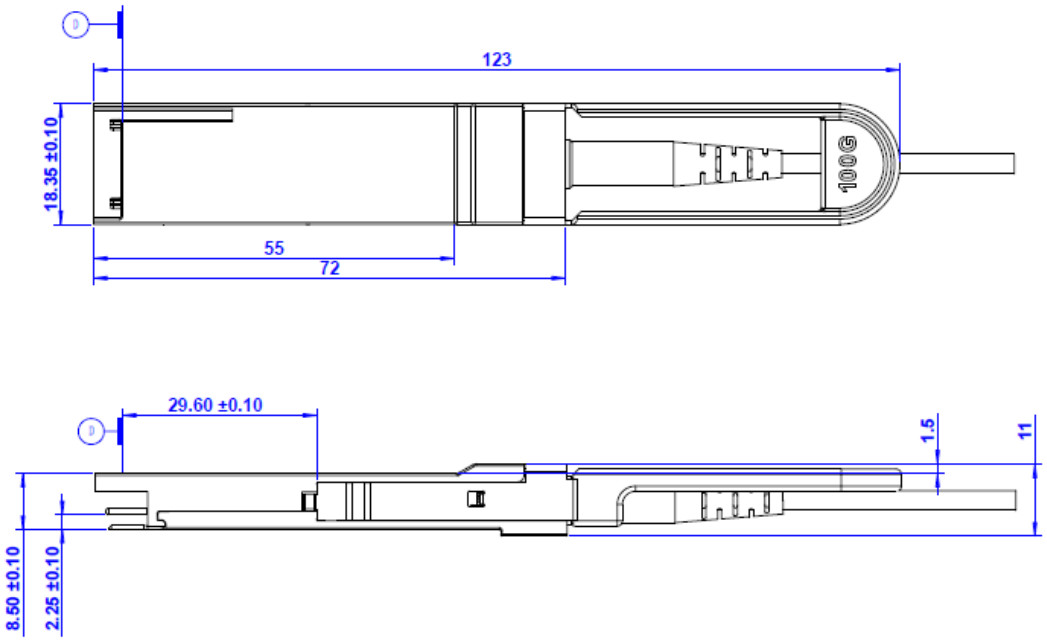

SFP28 Mechanical Specifications

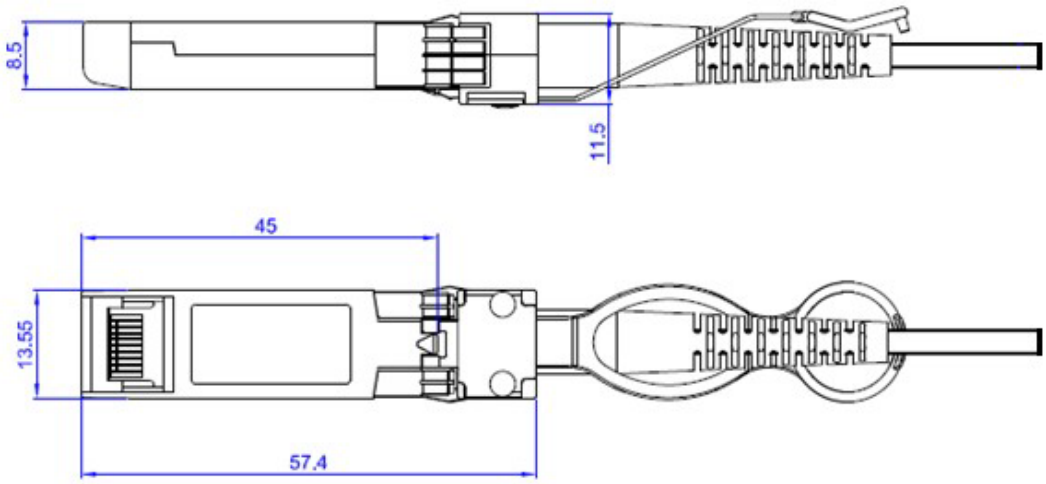

About AddOn Networks

In 1999, AddOn Networks entered the market with a single product. Our founders fulfilled a severe shortage for compatible, cost-effective optical transceivers that compete at the same performance levels as leading OEM manufacturers. Adhering to the idea of redefining service and product quality not previously had in the fiber optic networking industry, AddOn invested resources in solution design, production, fulfillment, and global support.

Combining one of the most extensive and stringent testing processes in the industry, an exceptional free tech support center, and a consistent roll-out of innovative technologies, AddOn has continually set industry standards of quality and reliability throughout its history.

Reliability is the cornerstone of any optical fiber network and is ingrained in AddOn's DNA. It has played a key role in nurturing the long-term relationships developed over the years with customers. AddOn remains committed to exceeding industry standards with certifications ranging from NEBS Level 3 to ISO 9001:2015 with every new development while maintaining the signature reliability of its products.

U.S. Headquarters

Email: sales@addonnetworks.com

Telephone: +1 877.292.1701

Fax: 949.266.9273

Europe Headquarters

Email: salesemea@addonnetworks.com

Telephone: +44 1285 842070