SFP-25GB-DW23-10-EX-AO

Extreme Networks® Compatible TAA 25GBase-DWDM SFP28 Transceiver C-Band 100GHz (SMF, 1558.98nm, 10km, LC, DOM)

Features:

- SFF-8432 and SFF-8472 Compliance
- Duplex LC Connector
- Commerical Temperature 0 to 70 Celsius
- Single-mode Fiber
- Hot Pluggable
- Excellent ESD Protection
- Metal with Lower EMI
- RoHS Compliant and Lead Free

Applications:

- 25x Gigabit Ethernet over DWDM
- Access and Enterprise

Product Description

This Extreme Networks® compatible SFP28 transceiver provides 25GBase-DWDM throughput up to 10km over single-mode fiber (SMF) using a wavelength of 1558.98nm via an LC connector. It can operate at temperatures between 0 and 70C. Our transceiver is built to meet or exceed OEM specifications and is guaranteed to be 100% compatible with Extreme Networks®. It has been programmed, uniquely serialized, and tested for data-traffic and application to ensure that it will initialize and perform identically. All of our transceivers comply with Multi-Source Agreement (MSA) standards to provide seamless network integration. Additional product features include Digital Optical Monitoring (DOM) support which allows access to real-time operating parameters. This transceiver is Trade Agreements Act (TAA) compliant. We stand behind the quality of our products and proudly offer a limited lifetime warranty.

AddOn's transceivers are RoHS compliant and lead-free.

TAA refers to the Trade Agreements Act (19 U.S.C. & 2501-2581), which is intended to foster fair and open international trade. TAA requires that the U.S. Government may acquire only "U.S.-made or designated country end products."

TAA COMPLIANT

Rev. 082426

Wavelength Guide (100GHz ITU Channels)

Channel	Wavelength (nm)	Frequency (THZ)	Channel	Wavelength (nm)	Frequency (THZ)
15	1565.50	191.5	**39**	1546.12	193.9
16	1564.68	191.6	**40**	1545.32	194.0
17	1563.86	191.7	**41**	1544.53	194.1
18	1563.05	191.8	**42**	1543.73	194.2
19	1562.23	191.9	**43**	1542.94	194.3
20	1561.42	192.0	**44**	1542.14	194.4
21	1560.61	192.1	**45**	1541.35	194.5
22	1559.79	192.2	**46**	1540.56	194.6
23	1558.98	192.3	**47**	1539.77	194.7
24	1558.17	192.4	**48**	1538.98	194.8
25	1557.36	192.5	**49**	1538.19	194.9
26	1556.55	192.6	**50**	1537.40	195.0
27	1555.75	192.7	**51**	1536.61	195.1
28	1554.94	192.8	**52**	1535.82	195.2
29	1554.13	192.9	**53**	1535.04	195.3
30	1553.33	193.0	**54**	1534.25	195.4
31	1552.52	193.1	**55**	1533.47	195.5
32	1551.72	193.2	**56**	1532.68	195.6
33	1550.92	193.3	**57**	1531.90	195.7
34	1550.12	193.4	**58**	1531.12	195.8
35	1549.32	193.5	**59**	1530.33	195.9
36	1548.51	193.6	**60**	1529.55	196.0
37	1547.72	193.7	**61**	1528.77	196.1
38	1546.92	193.8			

Absolute Maximum Ratings

Parameter	Symbol	Min.	Typ.	Max.	Unit	Notes
Maximum Supply Voltage	Vcc	-0.5		3.6	V	
Storage Temperature	Tstg	-40		85	°C	
Operating Case Temperature	Tc	0		70	°C	
Relative Humidity	RH	5		85	%	
Data Rate	BR		25.78		Gbps	

Electrical Characteristics

Parameter		Symbol	Min.	Typ.	Max.	Unit	Notes
Power Supply Voltage		V_{CC}	3.15	3.3	3.45	V	
Power Supply Current		Icc			606	mA	
Transmitter							
Differential CML Inputs		Vin	40		1000	mVp-p	1
Differential Input Impedance		Zin		100		Ω	2
Tx_Dis	**Disable**		2		Vcc+0.3	V	
	Enable		0		0.8		
Tx-Fault	**Fault**		2		Vcc+0.3	V	
	Normal		0		0.8		
Receiver							
Differential CML Outputs		Vout	450		1050	mVp-p	3
Differential Output Impedance		Zout	85	100	115	Ω	
RXD_LOS	**LOS**		2		Vcc+0.3	V	
	Normal		0		0.8		

Notes:

1. AC coupled input. CML logic. Internally AC coupled.
2. RIN>100kΩ @ DC.
3. AC coupled output. CML logic. Internally AC coupled.

Optical Characteristics

Parameter	Symbol	Min.	Typ.	Max.	Unit	Notes
Transmitter						
Wavelength	λ	1528.77		1565.50	nm	
Center Wavelength Spacing			100		GHz	
			0.8		nm	
Side Mode Suppression Ratio	SMSR	30			dB	
Average Output Power	Pout	-3		2	dBm	1
Extinction Ratio	ER	3			dB	
Receiver						
Receiver Sensitivity @25.78Gbps	Pmin			-10	dBm	2
Receiver Overload	Pmax	2			dBm	
LOS De-Assert	LOSD			-17	dBm	
LOS Assert	LOSA	-30			dBm	
LOS Hysteresis	Hy	0.5			dB	
Optical Signal to Noise Ratio Tolerance	OSNR	33			dB	

Notes:

1. Output is coupled into a 9/125µm single-mode fiber.
2. Minimum average optical power measured at the BER less than $5E^{-5}$. The measure pattern is PRBS 2^{31}-1.

Pin Descriptions

Pin	Symbol	Name/Descriptions	Plug Sequence	Ref.
1	VeeT	Transmitter Ground.	1	5
2	TX_Fault	Transmitter Fault Indication.	3	1
3	TX Disable	Transmitter Disable. Module disables on “high” or “open.”	3	2
4	SDA	Module Definition 2. 2-Wire Serial Interface Data.	3	3
5	SCL	Module Definition 1. 2-Wire Serial Interface Clock.	3	3
6	MOD-ABS	Module Definition 0.	3	3
7	RS0	RX Rate Select (LVTTL).	3	9
8	RX_LOS	Loss of Signal.	3	4
9	RS1	TX Rate Select (LVTTL).	1	9
10	VeeR	Receiver Ground.	1	5
11	VeeR	Receiver Ground.	1	5
12	RD-	Inverted Received Data Out.	3	6
13	RD+	Received Data Out.	3	7
14	VeeR	Receiver Ground.	1	5
15	VccR	Receiver Power. 3.3 ± 5%.	2	7
16	VccT	Transmitter Power. 3.3 ± 5%.	2	7
17	VeeT	Transmitter Ground.	1	5
18	TD+	Transmit Data In.	3	8
19	TD-	Inverted Transmit Data In.	3	8
20	VeeT	Transmitter Ground.	1	5

Notes:

1. Tx_Fault is an open collector/drain output which should be pulled up with a 4.7kΩ to 10kΩ resistor on the host board. Pull-up voltage is between 2.4V and VccT/R+0.3V. When “high,” the output indicates a laser fault of some kind. “Low” indicates normal operation. In the "low" state, the output will be pulled to <0.4V..

2. Tx_Disable is an input that is used to shut down the transmitter optical output. It is pulled up within the module with a 4.7kΩ–10kΩ resistor. Its states are:

   Low (-0.3 – 0.8V): Transmitter On.
   (>0.8, < 2.0V): Undefined.
   High (2.0 – VccT/R+0.3V): Transmitter Disabled.
   Open: Transmitter Disabled.

3. Module Absent. Connected to the VeeT or VeeR in the module.
4. LOS (Loss of Signal) is an open collector/drain output which should be pulled up with a 4.7kΩ to 10kΩ resistor. Pull-up is voltage between 2.4V and VccT/R+0.3V. When “high,” this output indicates the received optical power is below the worst-case receiver sensitivity (as defined by the standard in use). “Low” indicates normal operation. In the “low” state, the output will be pulled to <0.4V.

5. VeeR and VeeT may be internally connected within the SFP28 module.
6. RD-/+: these are the differential receiver outputs. They are AC coupled 100 (differential) lines which should be terminated with 100Ω (differential) at the user SERDES. The AC coupling is done inside the module and is thus not required on the host board. The voltage swing on these lines will be between 225mV-525mV single-ended when properly terminated.
7. VccR and VccT are the receiver and transmitter power supplies. They are defined as 3.3V±5% at the SFP+ connector pin. Maximum supply current is 606mA. Inductors with DC resistance of less than 1Ω should be used in order to maintain the required voltage at the SFP28 input pin with 3.3V supply voltage. When the recommended supply-filtering network is used, hot-plugging of the SFP28 transceiver module will result in an in rush current of no more than 30mA greater than the steady state value. VccR and VccT may be internally connected within the SFP transceiver module.
8. TD-/+: these are the differential transmitter inputs. They are AC-coupled, differential lines with 100 differential terminations inside the module. The AC coupling is done inside the module and is thus not required on the host board. The inputs will accept differential swings of 20mV-500mV single-ended, though it is recommended the values between 90mV-900mV single-ended be used for best EMI performance.
9. This pin has an internal 30k pull down to ground. This pin will not affect module performance.

Transceiver Pad layout

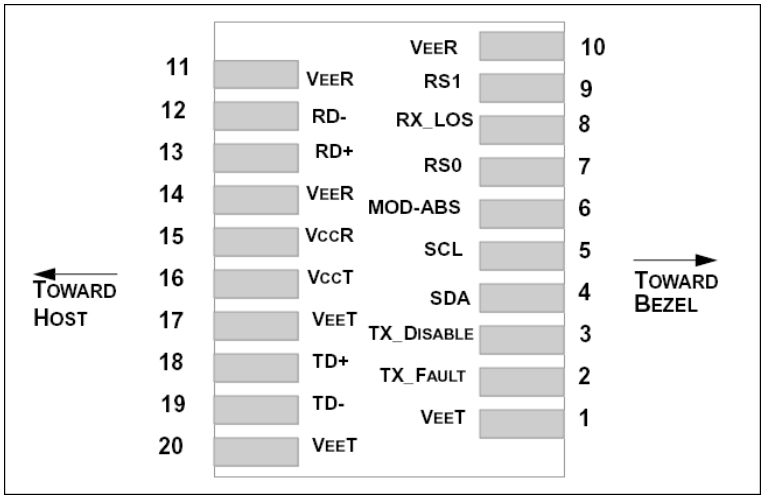

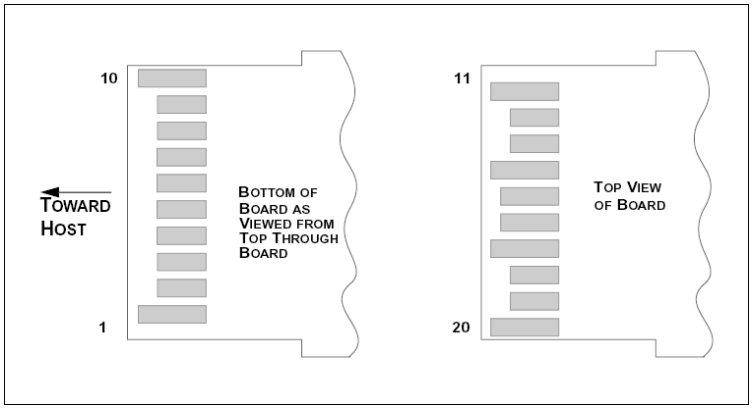

Mechanical Specifications

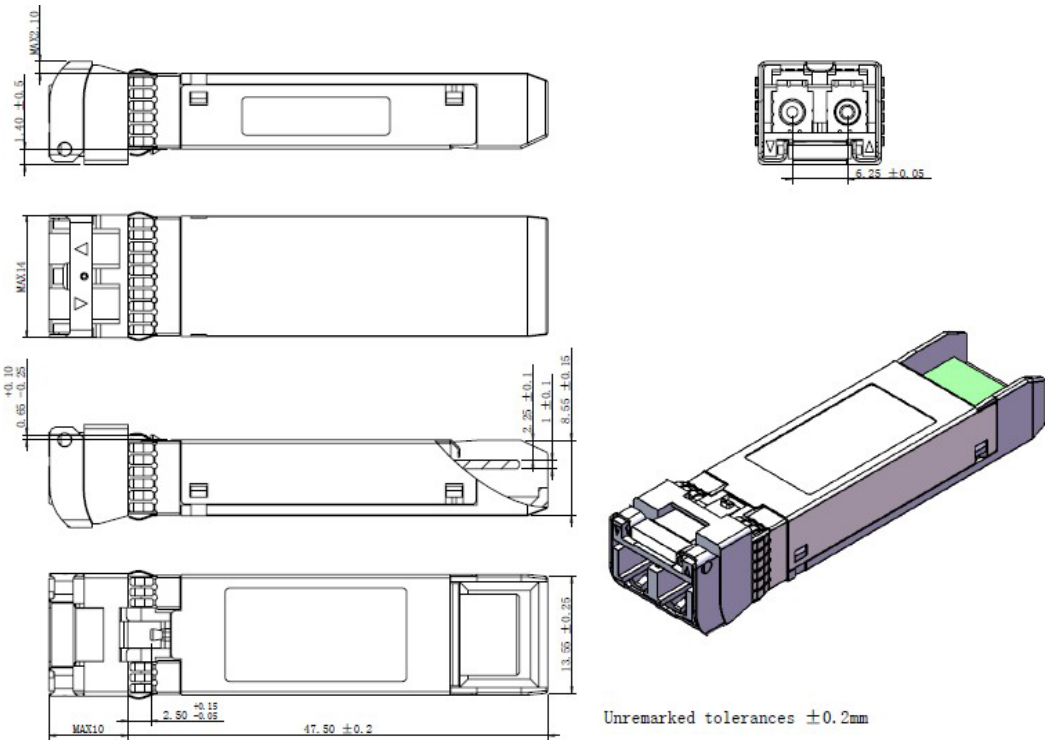

About AddOn Networks

In 1999, AddOn Networks entered the market with a single product. Our founders fulfilled a severe shortage for compatible, cost-effective optical transceivers that compete at the same performance levels as leading OEM manufacturers. Adhering to the idea of redefining service and product quality not previously had in the fiber optic networking industry, AddOn invested resources in solution design, production, fulfillment, and global support.

Combining one of the most extensive and stringent testing processes in the industry, an exceptional free tech support center, and a consistent roll-out of innovative technologies, AddOn has continually set industry standards of quality and reliability throughout its history.

Reliability is the cornerstone of any optical fiber network and is ingrained in AddOn's DNA. It has played a key role in nurturing the long-term relationships developed over the years with customers. AddOn remains committed to exceeding industry standards with certifications ranging from NEBS Level 3 to ISO 9001:2015 with every new development while maintaining the signature reliability of its products.

U.S. Headquarters

Email: sales@addonnetworks.com

Telephone: +1 877.292.1701

Fax: 949.266.9273

Europe Headquarters

Email: salesemea@addonnetworks.com

Telephone: +44 1285 842070