SFP-25GB-DW42-10-EX-AO

Extreme Networks® Compatible TAA 25GBase-DWDM SFP28 Transceiver C-Band 100GHz (SMF, 1543.73nm, 10km, LC, DOM)

Features:

- SFF-8432 and SFF-8472 Compliance
- Duplex LC Connector
- Commerical Temperature 0 to 70 Celsius
- Single-mode Fiber
- Hot Pluggable
- Excellent ESD Protection
- Metal with Lower EMI
- RoHS Compliant and Lead Free

Applications:

- 25x Gigabit Ethernet over DWDM
- Access and Enterprise

Product Description

This Extreme Networks® compatible SFP28 transceiver provides 25GBase-DWDM throughput up to 10km over single-mode fiber (SMF) using a wavelength of 1543.73nm via an LC connector. It can operate at temperatures between 0 and 70C. Our transceiver is built to meet or exceed OEM specifications and is guaranteed to be 100% compatible with Extreme Networks®. It has been programmed, uniquely serialized, and tested for data-traffic and application to ensure that it will initialize and perform identically. All of our transceivers comply with Multi-Source Agreement (MSA) standards to provide seamless network integration. Additional product features include Digital Optical Monitoring (DOM) support which allows access to real-time operating parameters. This transceiver is Trade Agreements Act (TAA) compliant. We stand behind the quality of our products and proudly offer a limited lifetime warranty.

AddOn's transceivers are RoHS compliant and lead-free.

TAA refers to the Trade Agreements Act (19 U.S.C. & 2501-2581), which is intended to foster fair and open international trade. TAA requires that the U.S. Government may acquire only "U.S.-made or designated country end products."

TAA COMPLIANT

Rev. 082426

Regulatory Compliance

- ESD to the Electrical PINs: compatible with MIL-STD-883E Method 3015.4
- ESD to the LC Receptacle: compatible with IEC 61000-4-3
- EMI/EMC compatible with FCC Part 15 Subpart B Rules, EN55022:2010
- Laser Eye Safety compatible with FDA 21CFR, EN60950-1& EN (IEC) 60825-1,2
- RoHS compliant with EU RoHS 2.0 directive 2015/863/EU

Wavelength Guide (100GHz ITU Channels)

Channel	Wavelength (nm)	Frequency (THZ)	Channel	Wavelength (nm)	Frequency (THZ)
21	1560.61	192.1	**41**	1544.53	194.1
22	1559.79	192.2	**42**	1543.73	194.2
23	1558.98	192.3	**43**	1542.94	194.3
24	1558.17	192.4	**44**	1542.14	194.4
25	1557.36	192.5	**45**	1541.35	194.5
26	1556.55	192.6	**46**	1540.56	194.6
27	1555.75	192.7	**47**	1539.77	194.7
28	1554.94	192.8	**48**	1538.98	194.8
29	1554.13	192.9	**49**	1538.19	194.9
30	1553.33	193.0	**50**	1537.4	195.0
31	1552.52	193.1	**51**	1536.61	195.1
32	1551.72	193.2	**52**	1535.82	195.2
33	1550.92	193.3	**53**	1535.04	195.3
34	1550.12	193.4	**54**	1534.25	195.4
35	1549.32	193.5	**55**	1533.47	195.5
36	1548.51	193.6	**56**	1532.68	195.6
37	1547.72	193.7	**57**	1531.9	195.7
38	1546.92	193.8	**58**	1531.12	195.8
39	1546.12	193.9	**59**	1530.33	195.9
40	1545.32	194.0	**60**	1529.55	196.0

Absolute Maximum Ratings

Parameter	Symbol	Min.	Typ.	Max.	Unit	Notes
Maximum Supply Voltage	Vcc	-0.3		4.0	V	
Storage Temperature	TS	-40		85	°C	
Operating Case Temperature	Tc	0		70	°C	
Relative Humidity	RH	0		85	%	
Data Rate	BR	24.33		25.78	Gbps	

Electrical Characteristics

Parameter	Symbol	Min.	Typ.	Max.	Unit	Notes
Supply Voltage	V_{CC}	3.13		3.47		
Power Dissipation	PD			2.0	W	
Transmitter						
Data Input Swing Differential	V_{IN}	190		1000	mV	
Differential line input Impedance	R_{IN}	80	100	120	Ohm	
Transmitter Fault Output-High	V_{FaultH}	2		Vcc+0.3	V	
Transmitter Fault Output-Low	V_{FaultL}	V_{EE}		V_{EE} +0.8	V	
Transmitter Disable Voltage-High	V_{DisH}	2		Vcc+0.3	V	
Transmitter Disable Voltage- low	V_{DisL}	V_{EE}		V_{EE} +0.8	V	
Receiver						
Differential line Output Impedance	R_{OUT}	80	100	120	Ohm	
Differential Data Output Voltage	V_{DR}	350		850	mVp-p	
LOS Output Voltage-High	V_{LOSH}	2		Vcc+0.3	V	
LOS Output Voltage-Low	V_{LOSL}	V_{EE}		V_{EE} +0.8	V	
Others						
Cold-Start time	$T_{start\text{-}cooled}$			35	s	

Optical Characteristics

Parameter	Symbol	Min.	Typ.	Max.	Unit	Notes
Transmitter						
Wavelength	λ	1529.55		1560.61	nm	
Center Wavelength Spacing		100			GHz	
Average Launched Power	PO	-1		5	dBm	
Extinction Ratio	ER	6			dB	
Average Launched Power (Laser Off)	P_{off}			-30	dBm	
Side-Mode Suppression Ratio	SMSR	30			dB	
Relative Intensity Noise	RIN_{20} OMA			-130	dB/Hz	
Receiver						
Center Wavelength	λ_{IN}	1260		1620	nm	
Receiver Overload	$P_{overload}$	2			dBm	
Receiver Sensitivity @5E-5 BOL	$P_{sen\ BOL}$			-15	dBm	
Receiver Sensitivity @5E-5 EOL	$P_{sen\ EOL}$			-14.5	dBm	1
Receiver Sensitivity @5E-5 EOL after 10km fiber transmission	$P_{sen1\ EOL}$			-9.0	dBm	1
Los Of Signal Assert	PA	-30			dBm	
Los Of Signal De-assert	PD			-16	dBm	
LOS -Hysteresis	P_{Hys}	0.5		6	dB	

Notes:

1. Measured at 5E-5, ER>4dB, PRBS 2^{31} -1

Pin Descriptions

Pin	Symbol	Name/Descriptions	Ref.
1	V_{EET}	Transmitter Ground	1
2	T_{FAULT}	Transmitter Fault	2
3	T_{DIS}	Transmitter Disable. Laser output disabled on high or open.	3
4	SDA	2-wire Serial Interface Data Line	2
5	SCL	2-wire Serial Interface Clock Line	2
6	MOD_ABS	Module Absent. Grounded within the module	2
7	NA	Not Used	
8	RX_LOS	Loss of Signal indication. Logic 0 indicates normal operation.	4
9	NA	No Used	
10	V_{EER}	Receiver Ground	1
11	V_{EER}	Receiver Ground	1
12	RD-	Receiver Inverted DATA out. AC Coupled.	
13	RD+	Receiver Non-inverted DATA out. AC Coupled.	
14	V_{EER}	Receiver Ground	1
15	V_{CCR}	Receiver Power Supply	5
16	V_{CCT}	Transmitter Power Supply	5
17	V_{EET}	Transmitter Ground	1
18	TD+	Transmitter Non-Inverted DATA in. AC Coupled.	
19	TD-	Transmitter Inverted DATA in. AC Coupled.	
20	V_{EET}	Transmitter Ground	1

Notes:

1. Circuit ground is internally isolated from chassis ground.
2. T_{FAULT} is an open collector/drain output, which should be pulled up with a 4.7k – 10k Ohms resistor on the host board if intended for use. Pull up voltage should be between 2.0V to Vcc + 0.3V. A high output indicates a transmitter fault caused by either the TX bias current or the TX output power exceeding the preset alarm thresholds. A low output indicates normal operation. In the low state, the output is pulled to <0.8V.
3. Laser output disabled on T_{DIS} >2.0V or open, enabled on T_{DIS} <0.8V.
4. LOS is open collector output. Should be pulled up with 4.7k – 10kΩ on host board to a voltage between 2.0V and 3.6V. Logic 0 indicates normal operation; logic 1 indicates loss of signal.
5. Internally connected

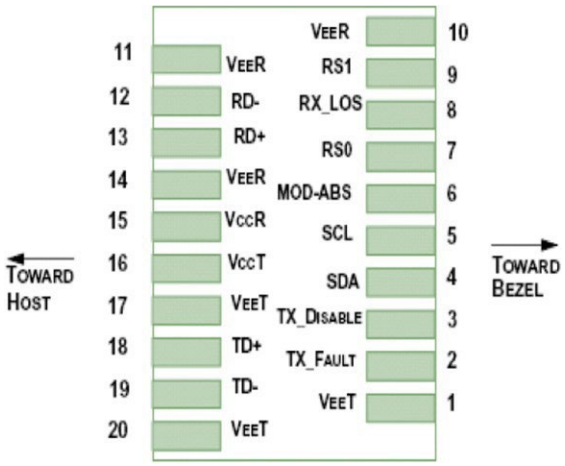

Pin-out of connector Block on Host board

Block Diagram of Transceiver

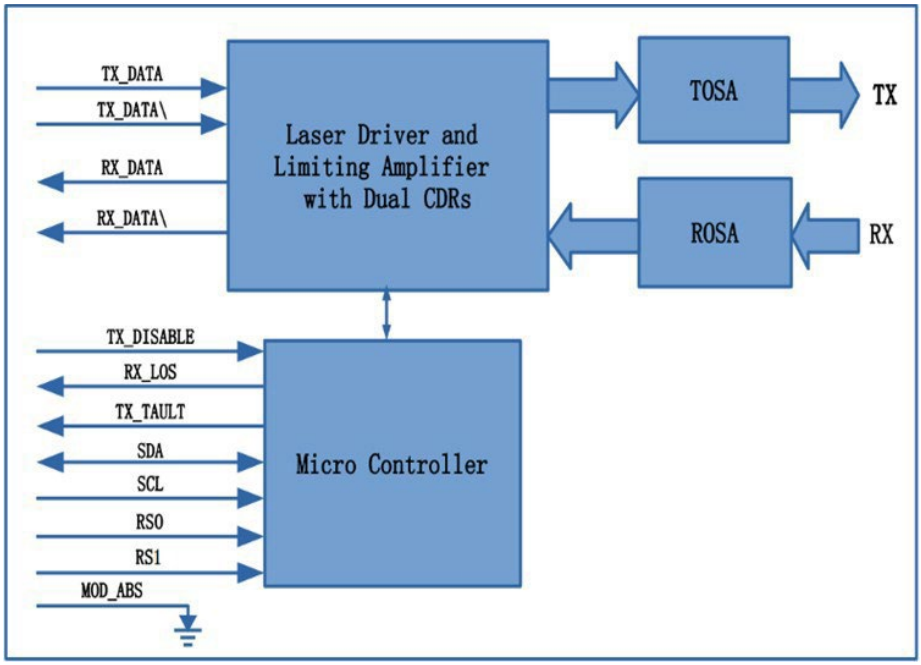

Recommended Interface Circuit

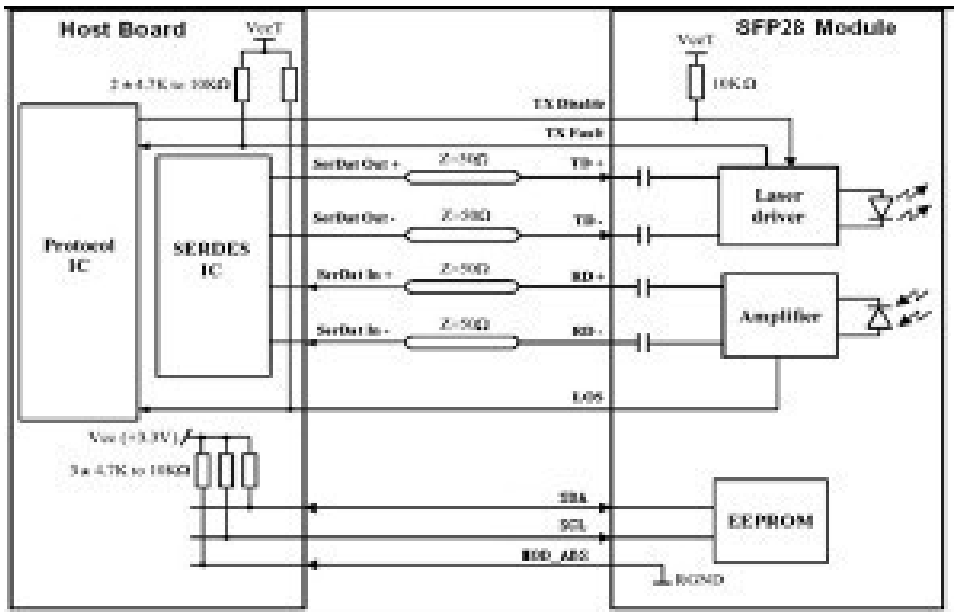

Mechanical Specifications

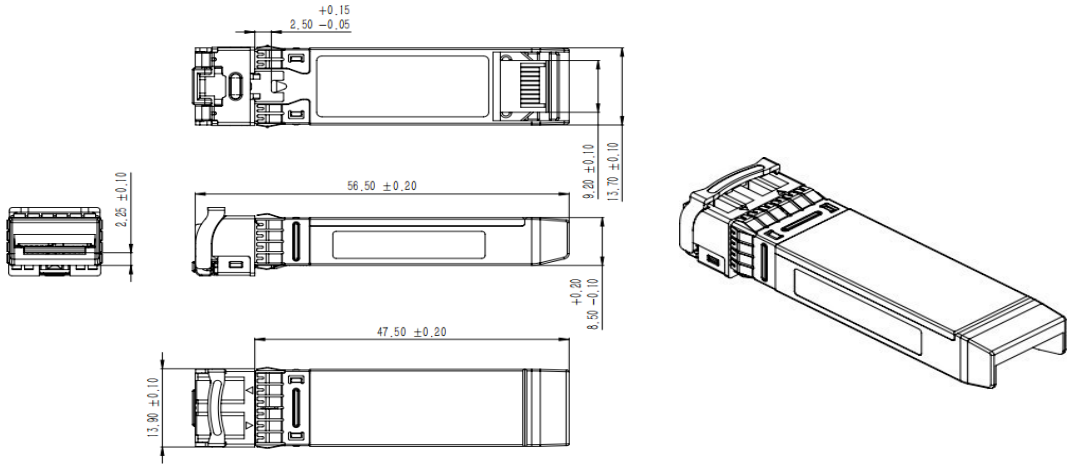

About AddOn Networks

In 1999, AddOn Networks entered the market with a single product. Our founders fulfilled a severe shortage for compatible, cost-effective optical transceivers that compete at the same performance levels as leading OEM manufacturers. Adhering to the idea of redefining service and product quality not previously had in the fiber optic networking industry, AddOn invested resources in solution design, production, fulfillment, and global support.

Combining one of the most extensive and stringent testing processes in the industry, an exceptional free tech support center, and a consistent roll-out of innovative technologies, AddOn has continually set industry standards of quality and reliability throughout its history.

Reliability is the cornerstone of any optical fiber network and is ingrained in AddOn's DNA. It has played a key role in nurturing the long-term relationships developed over the years with customers. AddOn remains committed to exceeding industry standards with certifications ranging from NEBS Level 3 to ISO 9001:2015 with every new development while maintaining the signature reliability of its products.

U.S. Headquarters

Email: sales@addonnetworks.com

Telephone: +1 877.292.1701

Fax: 949.266.9273

Europe Headquarters

Email: salesemea@addonnetworks.com

Telephone: +44 1285 842070