SFP-10GBASE-LR-20-I-AV-AO

ADVA® Compatible TAA 10GBase-LR SFP+ Transceiver (SMF, 1310nm, 20km, LC, DOM, -40 to 85C)

Features:

- Compliant with IEEE802.3ae 10GBASE-LR/LW
- 1310nm DFB-LD Transmitter
- Compliant with MSA SFP+ Specification SFF-8431
- Single 3.3V Power Supply and TTL Logic Interface
- Duplex LC Connector
- Distance up to 20km
- Hot-Pluggable
- Industrial Temperature -40 to 85 Celsius
- Excellent ESD Protection
- Metal with Lower EMI
- RoHS compliant and Lead Free



Applications:

- 10GBase Ethernet

Product Description

This ADVA® compatible SFP+ transceiver provides 10GBase-LR throughput up to 20km over single-mode fiber (SMF) using a wavelength of 1310nm via an LC connector. It can operate at temperatures between -40 and 85C. It is guaranteed to be 100% compatible with the equivalent ADVA® transceiver. This easy to install, hot swappable transceiver has been programmed, uniquely serialized and data-traffic and application tested to ensure that it will initialize and perform identically. Digital optical monitoring (DOM) support is also present to allow access to real-time operating parameters. This transceiver is Trade Agreements Act (TAA) compliant. We stand behind the quality of our products and proudly offer a limited lifetime warranty.

AddOn's transceivers are RoHS compliant and lead-free.

TAA refers to the Trade Agreements Act (19 U.S.C. & 2501-2581), which is intended to foster fair and open international trade. TAA requires that the U.S. Government may acquire only "U.S.-made or designated country end products."

TAA COMPLIANT

Absolute Maximum Ratings

Parameter	Symbol	Min.	Typ.	Max.	Unit	Notes
Maximum Supply Voltage	Vcc	-0.5		4	V	1
Storage Temperature	Tstg	-40		85	°C	
Operating Case Temperature	Tc	-40		85	°C	
Relative Humidity	RH	0		85	%	
Data Rate	DR	9.83	10.3125	11.3	Gb/s	2
Bit Error Rate	BER			10^{-12}		

Notes:

1. For electrical interface
2. IEEE 802.3ae

Electrical Characteristics

Parameter	Symbol	Min.	Typ.	Max.	Unit	Notes
Module Supply Voltage	Vcc	3.14	3.3	3.46	V	
Module Supply Current	Icc		200	350	mA	
Power Dissipation	PD		0.65	1.2	W	
Transmitter						
Input Differential Impedance	R_{IN}		100		Ω	
Differential Data Input Swing	$V_{IN\ PP}$	180		700	mV	
Transmit Disable Voltage	V_D	2		V_{CC}	V	
Transmit Enable Voltage	V_{EN}	V_{EE}		V_{EE}+0.8	V	
Receiver						
Differential Data Output Swing	$V_{OUT\ PP}$	300		850	mV	
Data Output Rise/Fall Time (20%-80%)	t_r/t_f	28			ps	
LOS Assert	$V_{LOS\ A}$	2		$V_{CC\ HOST}$	V	
LOS De-Assert	$V_{LOS\ D}$	V_{EE}		V_{EE}+0.5	V	

Optical Characteristics

Parameter	Symbol	Min.	Typ.	Max.	Unit	Notes
Transmitter						
Output Optical Power	P_{TX}	-8.2		0.5	dBm	1
Optical Center Wavelength	λ_C	1260		1355	nm	
Optical Modulation Amplitude	OMA	-5.2			dBm	2
Extinction Ratio	ER	3.5	5.5		dB	
Spectral Width(-20dB)	$\Delta\lambda$			1	nm	
Side Mode Suppression Ratio	SMSR	30			dB	
Relative Intensity Noise	RIN			-128	dB/Hz	
Transmitter Dispersion Penalty	TDP			3.2	dB	
Launch Power of OFF Transmitter	P_{OUT_OFF}			-30	dBm	1
Transmitter Jitter						2
Receiver						
Optical Center Wavelength	λ_C	1260		1600	nm	
Average Receive Power	P_{RX}	-14.4		0.5	dBm	
Receiver Sensitivity @10.3Gb/s	R_{X_SEN}			-14.4	dBm	3
Receiver Reflectance	TR_{RX}			-12	dB	
LOS Assert	LOS_A	-30			dBm	
LOS De-Assert	LOS_D			-17	dBm	
LOS Hysteresis	LOS_H	0.5			dB	

Notes:

1. Average
2. According to IEEE 802.3ae requirement.
3. Test the resulting value using the minimum ER value within the defined range; BER<10^{-12}; 2^{31}-1 PRBS.

Pin Descriptions

Pin	Symbol	Name/Descriptions	Ref.
1	VeeT	Transmitter Ground.	1
2	Tx_Fault	Transmitter Fault. LVTTL-O. “High” indicates a fault condition.	2
3	Tx_Disable	Transmitter Disable. LVTTL-I. “High” or “open” disables the transmitter.	3
4	SDA	2-Wire Serial Interface Data. LVCMOS-I/O. MOD-DEF2.	4
5	SCL	2-Wire Serial Interface Clock. LVCMOS-I/O. MOD-DEF1.	4
6	MOD_ABS	Module Absent (Output). Connected to VeeT or VeeR in the module.	5
7	RS0	N/A.	6
8	Rx_LOS	Receiver Loss of Signal. LVTTL-O.	2
9	RS1	N/A.	6
10	VeeR	Receiver Ground.	1
11	VeeR	Receiver Ground.	1
12	RD-	Inverse Received Data Out. CML-O.	
13	RD+	Received Data Out. CML-O.	
14	VeeR	Receiver Ground.	
15	VccR	+3.3V Receiver Power.	
16	VccT	+3.3V Transmitter Power.	
17	VeeT	Transmitter Ground.	1
18	TD+	Transmitter Data In. CML-I.	
19	TD-	Inverse Transmitter Data In. CML-I.	
20	VeeT	Transmitter Ground.	1

Notes:

1. The module signal grounds are isolated from the module case.
2. This is an open collector/drain output that on the host board requires a 4.7KΩ to 10KΩ pull-up resistor to Host_Vcc.
3. This input is internally biased high with a 4.7KΩ to 10KΩ pull-up resistor to VccT.
4. 2-Wire Serial Interface Clock and Data lines require an external pull-up resistor dependent on the capacitance load.
5. This is a ground return that, on the host board, requires a 4.7KΩ to 10KΩ pull-up resistor to the Host_Vcc.
6. Rate select can also be set through the 2-wire bus in accordance with SFF-8472 v. 12.1. Rx Rate Select is set at Bit 3, Byte 110, and Address A2h, and Tx Rate Select is set at Bit 3, Byte 118, and Address A2h. **Note:** Writing a “1” selects maximum bandwidth operation. Rate select is the logic OR of the input state of Rate Select Pin and 2-wire bus.

Electrical Pin-out Details

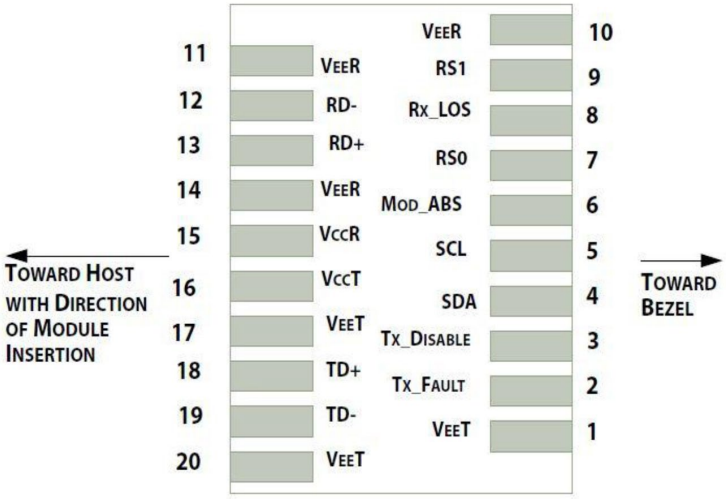

Block Diagram

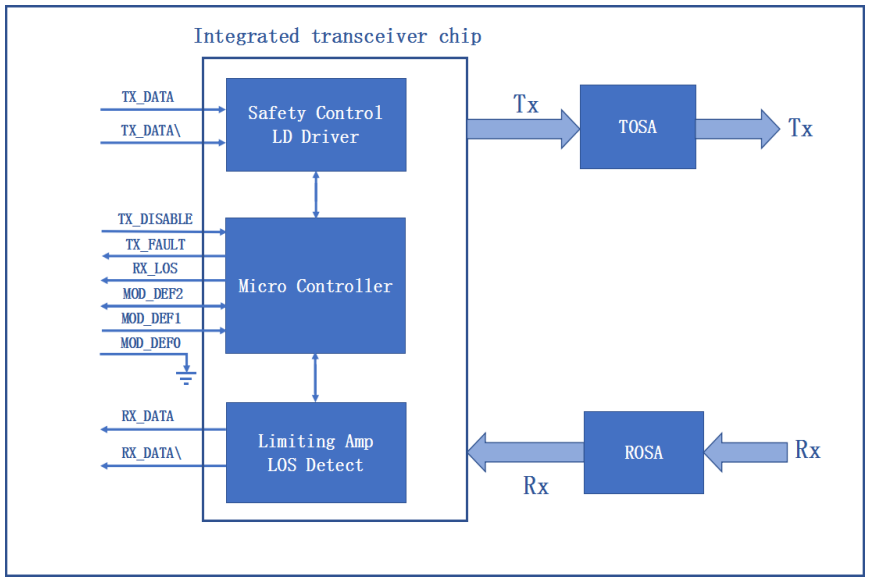

Mechanical Specifications

ALL DIMENSIONS ARE ±0.2mm UNLESS OTHERWISE SPECIFIED

UNIT: mm

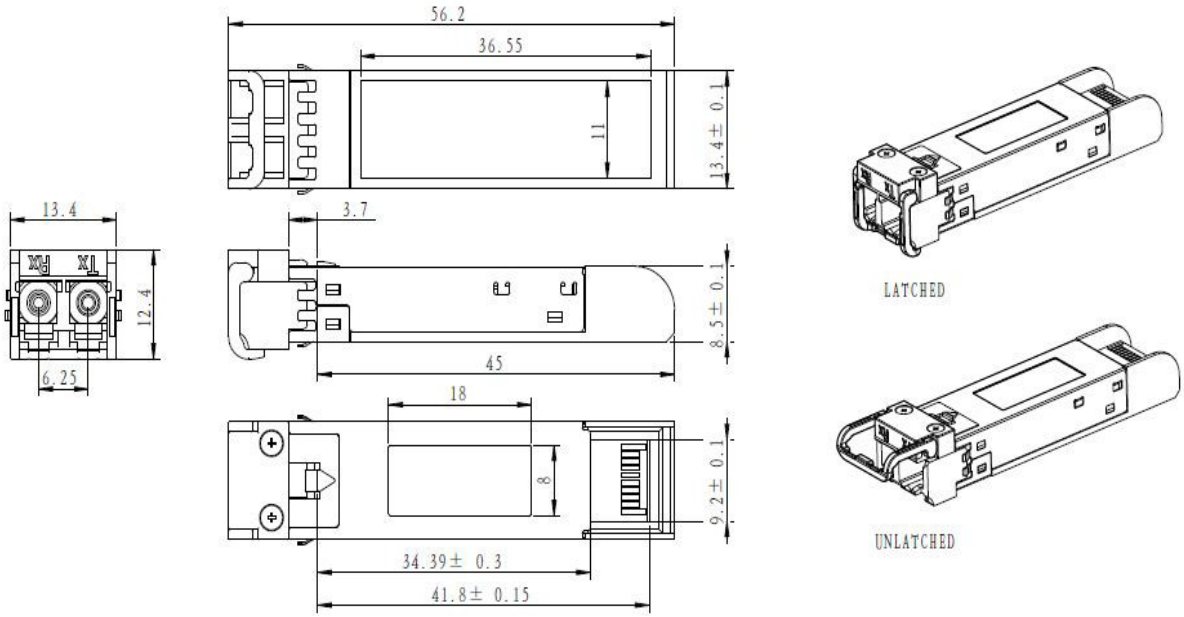

EEPROM Information

EEPROM memory map-specific data field description is as below:

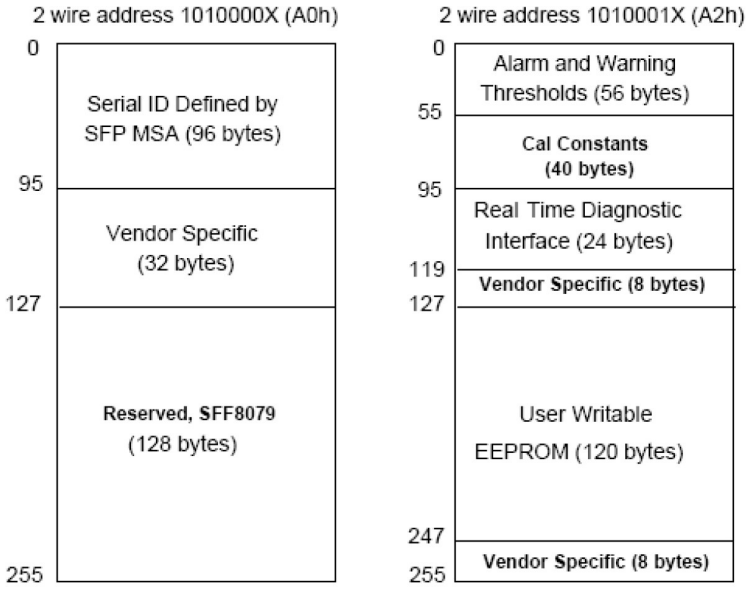

About AddOn Networks

In 1999, AddOn Networks entered the market with a single product. Our founders fulfilled a severe shortage for compatible, cost-effective optical transceivers that compete at the same performance levels as leading OEM manufacturers. Adhering to the idea of redefining service and product quality not previously had in the fiber optic networking industry, AddOn invested resources in solution design, production, fulfillment, and global support.

Combining one of the most extensive and stringent testing processes in the industry, an exceptional free tech support center, and a consistent roll-out of innovative technologies, AddOn has continually set industry standards of quality and reliability throughout its history.

Reliability is the cornerstone of any optical fiber network and is ingrained in AddOn's DNA. It has played a key role in nurturing the long-term relationships developed over the years with customers. AddOn remains committed to exceeding industry standards with certifications ranging from NEBS Level 3 to ISO 9001:2015 with every new development while maintaining the signature reliability of its products.



U.S. Headquarters

Email: sales@addonnetworks.com

Telephone: +1 877.292.1701

Fax: 949.266.9273

Europe Headquarters

Email: salesemea@addonnetworks.com

Telephone: +44 1285 842070