**SFP-10GB-HD1-35D-20-AV-AO**

ADVA® Compatible TAA 10GBase-CWDM HD1 SFP+ Transceiver (SMF, 1350nm HTx/LRx, 20km, LC, DOM)

**Features:**

- SFF-8432 and SFF-8472 Compliance
- Simplex LC Connector
- Commercial Temperature 0 to 70 Celsius
- Single-mode Fiber
- Hot Pluggable
- Excellent ESD Protection
- Metal with Lower EMI
- RoHS Compliant and Lead Free



**Applications:**

- 10 Gigabit Ethernet over CWDM
- Access, Metro and Enterprise

**Product Description**

This ADVA® compatible SFP+ transceiver provides 10GBase-CWDM HD1 throughput up to 20km over single-mode fiber (SMF) at a bidirectional wavelength of 1350nm HTx/LRx via an LC connector. It can operate at temperatures between 0 and 70C. The listed reach has been determined using a link budget calculation and tested in a standard environment. Actual link distances achieved will be dependent upon the deployed environment. Our transceiver is built to meet or exceed OEM specifications and is guaranteed to be 100% compatible with ADVA®. It has been programmed, uniquely serialized, and tested for data-traffic and application to ensure that it will initialize and perform identically. All of our transceivers comply with Multi-Source Agreement (MSA) standards to provide seamless network integration. This transceiver is Trade Agreements Act (TAA) compliant. We stand behind the quality of our products and proudly offer a limited lifetime warranty.

AddOn's transceivers are RoHS compliant and lead-free.

TAA refers to the Trade Agreements Act (19 U.S.C. & 2501-2581), which is intended to foster fair and open international trade. TAA requires that the U.S. Government may acquire only "U.S.-made or designated country end products."

TAA COMPLIANT

## Absolute Maximum Ratings

| Parameter | Symbol | Min | Max | Units | Notes |
|---|---|---|---|---|---|
| **Storage Temperature** | Tstg | -40 | 85 | ℃ | |
| **Operating Case Temperature** | Tc | 0 | 70 | ℃ | |
| **Relative Humidity** | RH | 5 | 85 | % | Non-Condensing |
| **Transmitter Single-Ended Input Voltage** | Vp | -0.3 | Vcc+0.3 | V | |
| **Power Supply Voltage** | VccT, VccR | -0.3 | 3.8 | V | |
| **Average Receiver Input Optical Power** | Pavg | | -5 | dBm | |

## Electrical Characteristics

| Parameter | Symbol | Min. | Typ. | Max. | Unit | Notes |
|---|---|---|---|---|---|---|
| **Supply Voltage** | Vcc | 3.135 | 3.3 | 3.465 | V | |
| **Module Supply Current** | Icc | | | 545 | mA | 1 |
| **Power Dissipation** | PD | | | 1800 | mW | 2 |
| **Power Supply Noise Tolerance Including Ripple (10Hz~10MHz)** | | | | 66 | mVp-p | 3 |
| **Low-Speed Signal Electrical Characteristics** | | | | | | |
| **Tx_Fault, Rx_LOS** | VOL | -0.3 | | 0.4 | V | At 0.7mA |
| | VOH | -50 | | 37.5 | µA | 4 |
| **Tx_Disable** | VIL | -0.3 | | 0.8 | V | 5 |
| | VIH | 2.0 | | VccT + 0.3 | V | 5 |
| **2-Wire Interface** | | | | | | |
| **Host 2-Wire Vcc** | Vcch | 3.14 | | 3.46 | V | 6 |
| **SCL and SDA** | VOL | 0 | | 0.4 | V | Rp pulled up to VccT/R, Note 7 |
| | VOH | Vcch – 0.5 | | Vcch + 0.3 | V | |
| **SCL and SDA** | VIL | -0.3 | | VccT*0.3 | V | 8 |
| | VIH | VccT*0.7 | | VccT + 0.5 | V | |
| **Input Current on the SCL and SDA Contacts** | Ii | -10 | | 10 | µA | |
| **Capacitance on SCL and SDA Contacts** | Ci | | | 14 | pF | 9 |
| **Total Bus Capacitance for SCL and SDA** | Cb | | | 100 | pF | Note10<br>At 400kHz, 3.0Ω Rp, Max.<br>At 100kHz, 8.0Ω Rp, Max. |
| | | | | 290 | pF | Note10<br>At 400kHz, 1.1Ω Rp, Max.<br>At 100kHz, 2.7Ω Rp, Max. |

**Notes:**

1. Measured with a 3.3V supply voltage.
2. Supply current includes both VccT and VccR connections.
3. Power noise tolerance test setup shown in figure below.

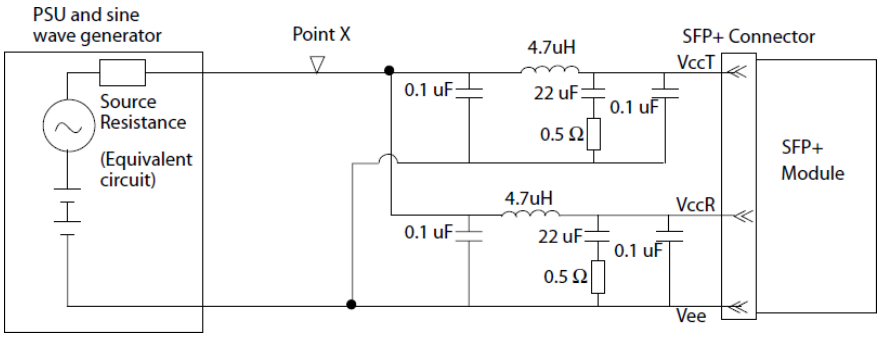


4. Measured with a 4.7kΩ load pull-up to the Host_Vcc.
5. Tx_Disable has an internal 4.7kΩ to 10kΩ pull up to VccT.
6. The Host 2-wire Vcc is the voltage used for resistive pull up for the 2-wire interface.
7. Rp is the pull-up resistor. Active bus termination may be used by the host in place of a pull-up resistor. Pull-ups can be connected to any one of several power supplies; however, the host board design shall ensure that no module contact has voltage exceeding module VccT/R + 0.5V nor requires the module to sink more than 3.0mA current.
8. These voltages are measured on the other side of the connector to the device under test.
9. Ci is the capacitance looking into the module SCL and SDA contacts.
10. Cb is the total bus capacitance on the SCL or SDA bus.

**High-Speed Signal Electrical Characteristics**

| Parameter | Symbol | Min. | Typ. | Max. | Unit | Notes |
|---|---|---|---|---|---|---|
| **Tx Input Differential Swing Voltage** | VI | 190 | | 700 | mVp-p | |
| **AC Common-Mode Voltage Tolerance** | | 15 | | | mV | 1 |
| **Differential Input S-Parameter (Note 1)** | SDD11 | | | Note 2 | dB | 0.01 to 4.1GHz |
| | | | | Note 3 | dB | 4.1 to 11.1GHz |
| **Reflected Differential to Common-Mode Conversion** | SCD11 | | | -10 | dB | 0.01 to 11.1GHz |
| **Rx Output Differential Swing Voltage** | Vo | 300 | | 850 | mVp-p | |
| **Termination Mismatch at 1MHz** | ΔZM | | | 5 | % | |
| **Output AC Common-Mode Voltage** | | | | 7.5 | mV | 4 |
| **Differential Output S-Parameter** | SDD22 | | | Note 5 | dB | 0.01 to 4.1GHz |
| | | | | Note 6 | dB | 4.1 to 11.1GHz |
| **Common-Mode Output Reflection Coefficient** | SCC2 | | | Note 7 | dB | 0.01 to 2.5GHz |
| | | | | -3 | dB | 2.5 to 11.1GHz |
| **Rx Output Rise and Fall Time (20-80%)** | Tr/Tf | 28 | | | Ps | |
| **Rx Output Total Jitter** | TJ | | | 0.70 | Ulp-p | |
| **Rx Output Deterministic Jitter** | DJ | | | 0.42 | Ulp-p | |

**Notes:**

1. Measured at B" with Host Compliance Board and Module Compliant Board pair.
2. Reflection Coefficient given by equation SDD11 (dB) < -12 + 2 x SQRT (f), with f in GHz.
3. Reflection Coefficient given by equation SDD11 (dB) < -6.3 + 13 x log10 (f/5.5), with f in GHz.
4. The RMS value is measured by calculating the standard deviation of the histogram for one UI of the common-mode signal.
5. Reflection Coefficient given by equation SDD22 (dB) < -12 + 2 x SQRT (f), with f in GHz.
6. Reflection Coefficient given by equation SDD22 (dB) < -6.3 + 13 x log10 (f/5.5), with f in GHz.
7. Reflection Coefficient given by equation SCC22 (dB) < -7 + 1.6 x f, with f in GHz.

**Optical Characteristics**

| Parameter | Symbol | Min. | Typ. | Max. | Unit | Notes |
|---|---|---|---|---|---|---|
| **Transmitter** | | | | | | |
| **Center Wavelength** | λC | λC+2.0 to λC+6.5 | | | nm | CWDM, DFB-LD, Note 1 |
| **Side-Mode Suppression Ratio** | SMSR | 30 | | | dB | 2 |
| **Average Optical Power** | Pave | -2 | | 2 | dBm | |
| **Optical Modulation Amplitude** | POMA | -2.6 | | | dBm | |
| **Spectral Width** | Δ λ | | | 1 | nm | @ -20dB |
| **Extinction Ratio** | ER | 4 | | | dB | 2 |
| **Transmitter and Dispersion Penalty** | TDP | | | 3.2 | dB | 2 |
| **Laser Off Power** | Poff | | | -35 | dBm | |
| **Relative Intensity Noise** | $RIN_{12}OMA$ | | | -128 | dB/Hz | 2 |
| **Transmitter Output Eye Mask** | IEEE 802.3-2008 Clause 52.9.7 | | | | | 5 |
| **Receiver** | | | | | | |
| **Operating Wavelength** | λC | λC- 6.5 to λC- 1.5 | | | nm | 1 |
| **Average Receiver Sensitivity** | S | | | -19 | dBm | 3 |
| **Receiver Power (Pave) Overload** | OL | -5 | | | dBm | 3 |
| **Sensitivity (OMA) @ 10.3125Gbps** | SOMA | | | -19.6 | dBm | 3 |
| **Receiver Reflectance** | RR | | | -27 | dB | @ λO |
| **Loss of Signal - Asserted** | $P_A$ | -35 | | | dBm | 4 |
| **Loss of Signal - De-Asserted** | $P_D$ | | | -19 | dBm | 4 |
| **Loss of Signal - Hysteresis** | $P_D$-$P_A$ | 0.5 | 2.5 | 5 | dB | |

**Notes:**

1. λC = 1271nm, 1291nm, 1311nm, 1331nm, and 1351nm.
2. IEEE 802.3ae Clause 52 compliant.
3. Measured with PRBS $2^{31}$-1 at $1x10^{-12}$ BER and 4dB extinction ratio.
4. Loss of Signal (LOS) detection responds only to OMA and the indicator will respond unpredictably with the application of un-modulated optical.

**Pin Descriptions**

| Pin | Symbol | Name/Description | Notes |
|---|---|---|---|
| **1** | VeeT | Transmitter Signal Ground. | 1 |
| **2** | Tx_Fault | Transmitter Fault (LVTTL-O). “High” indicates a fault condition. | 2 |
| **3** | Tx_Disable | Transmitter Disable (LVTTL-I). “High” or “open” disables the transmitter. | 3 |
| **4** | SDA | 2-Wire Serial Interface Data (LVCMOS – I/O). Same as MOD-DEF2 in INF-8074. | 4 |
| **5** | SCL | 2-Wire Serial Interface Clock (LVCMOS – I/O). Same as MOD-DEF1 in INF-8074. | 4 |
| **6** | MOD_DEF0 | Module Absent (Output). Connected to VeeT or VeeR in the module. | 5 |
| **7** | RS0 | Rate Select 0. Not used. Internally pulled down. | |
| **8** | Rx_LOS | Receiver Loss of Signal (LVTTL-O). | 2 |
| **9** | RS1 | Rate Select 1. Not used. Internally pulled down. | |
| **10** | VeeR | Receiver Signal Ground. | 1 |
| **11** | VeeR | Receiver Signal Ground. | 1 |
| **12** | RD- | Receiver Data Out Inverted (CML-O). | |
| **13** | RD+ | Receiver Data Out (CML-O). | |
| **14** | VeeR | Receiver Signal Ground. | |
| **15** | VccR | +3.3V Receiver Power. | |
| **16** | VccT | +3.3V Transmitter Power. | |
| **17** | VeeT | Transmitter Signal Ground. | 1 |
| **18** | TD+ | Transmitter Data In (CML-I). | |
| **19** | TD- | Transmitter Data In Inverted (CML-I). | |
| **20** | VeeT | Transmitter Signal Ground. | 1 |

**Notes:**

1. The module signal grounds are isolated from the module case.
2. This is an open collector/drain output that on the host board requires a 4.7kΩ to 10kΩ pull-up resistor to the Host_Vcc.
3. This input is internally biased “high” with a 4.7kΩ to 10kΩ pull-up resistor to the VccT.
4. 2-wire serial interface clock and data lines require an external pull-up resistor dependent on the capacitance load.
5. The signals MOD_DEF0, 1, & 2 designate the 2-wire serial interface pins. They must be pulled up with a 4.7kΩ to 10kΩ resistor on the host board. MOD_DEF0 is grounded by the module to indicate that the module is present.

**Pin-Out Details**

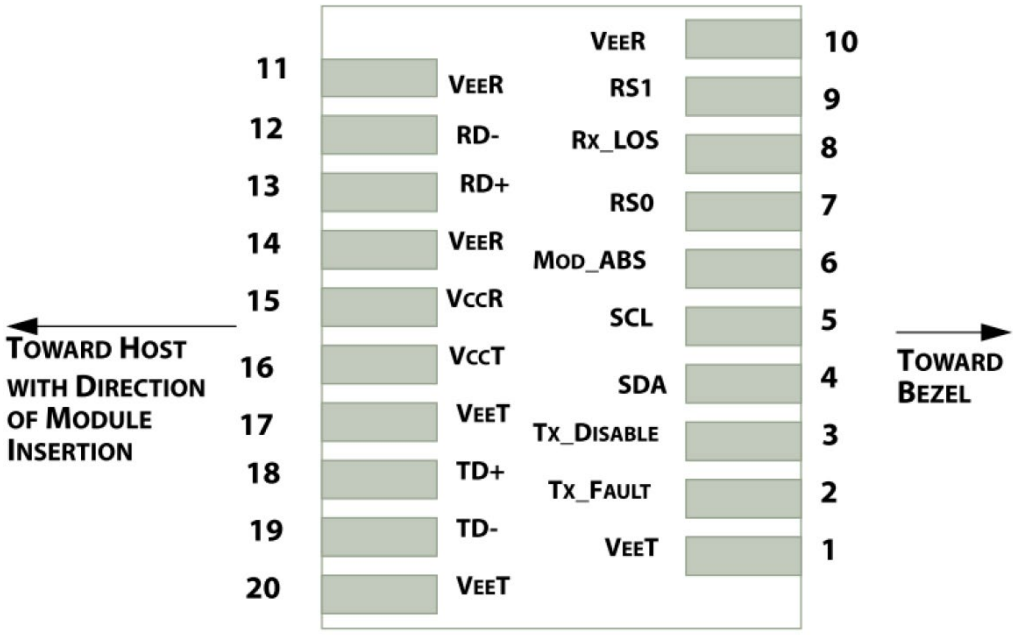


**Electrical Pad Layout**

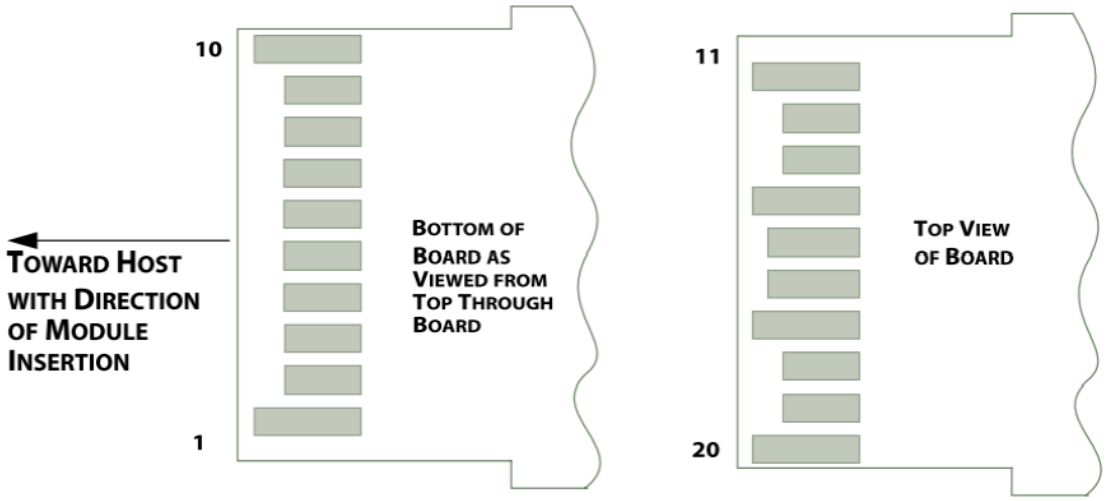

**2-Wire Bus Timing Diagram**

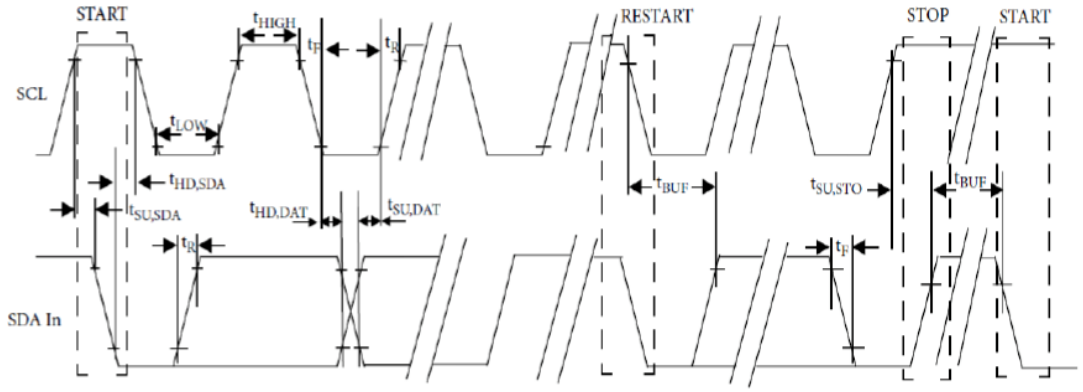


**Optical Eye Mask**

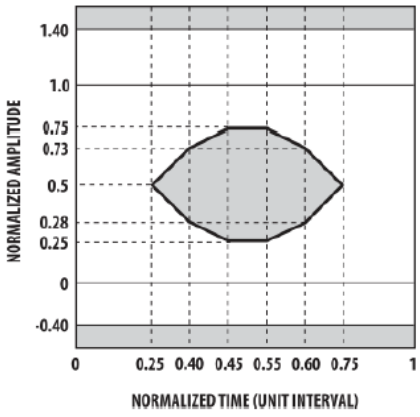


**Transmitter Optical Eye Mask Definition**

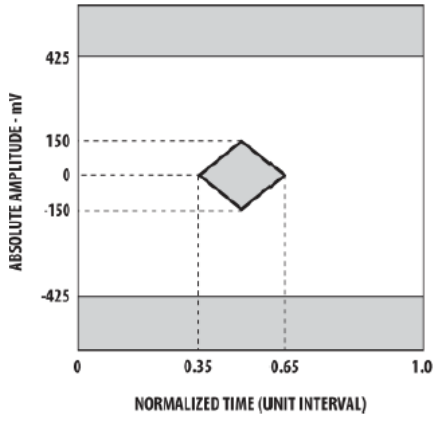


**Receiver Electrical Optical Eye Mask Definition**

**Recommended Application Schematic**

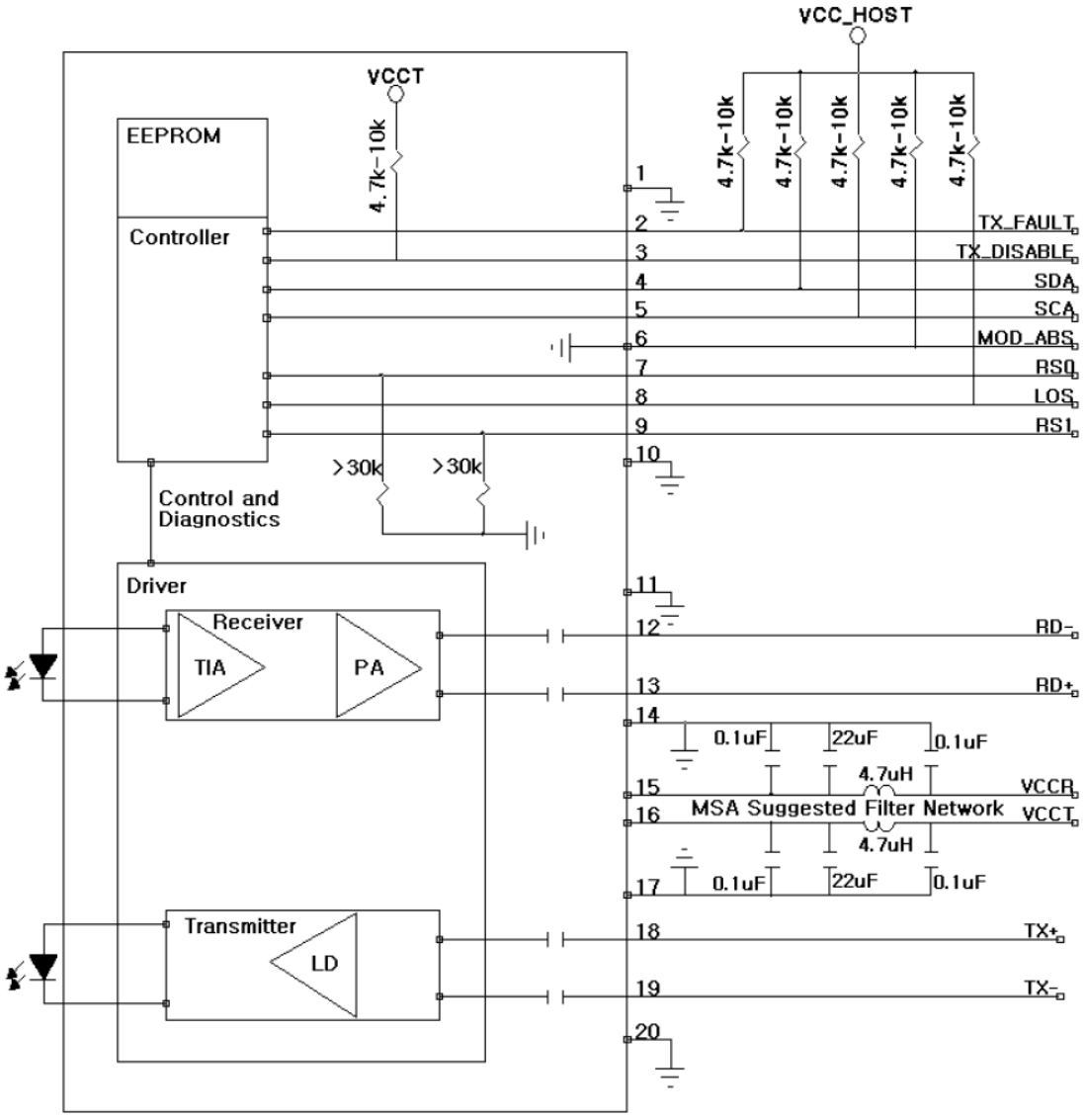


**Notes:**

1. Tx_Disable: transmitter disable, logic high, 4.7kΩ to 10kΩ pull-up to Vcc on SFP.
2. Tx_Fault: transmitter fault, logic high, 4.7kΩ to 10kΩ pull-up to Vcc on Host.
3. Rx_LOS: receiver loss of signal, logic high, 4.7kΩ to 10kΩ pull-up to Vcc on Host.

## Mechanical Specifications

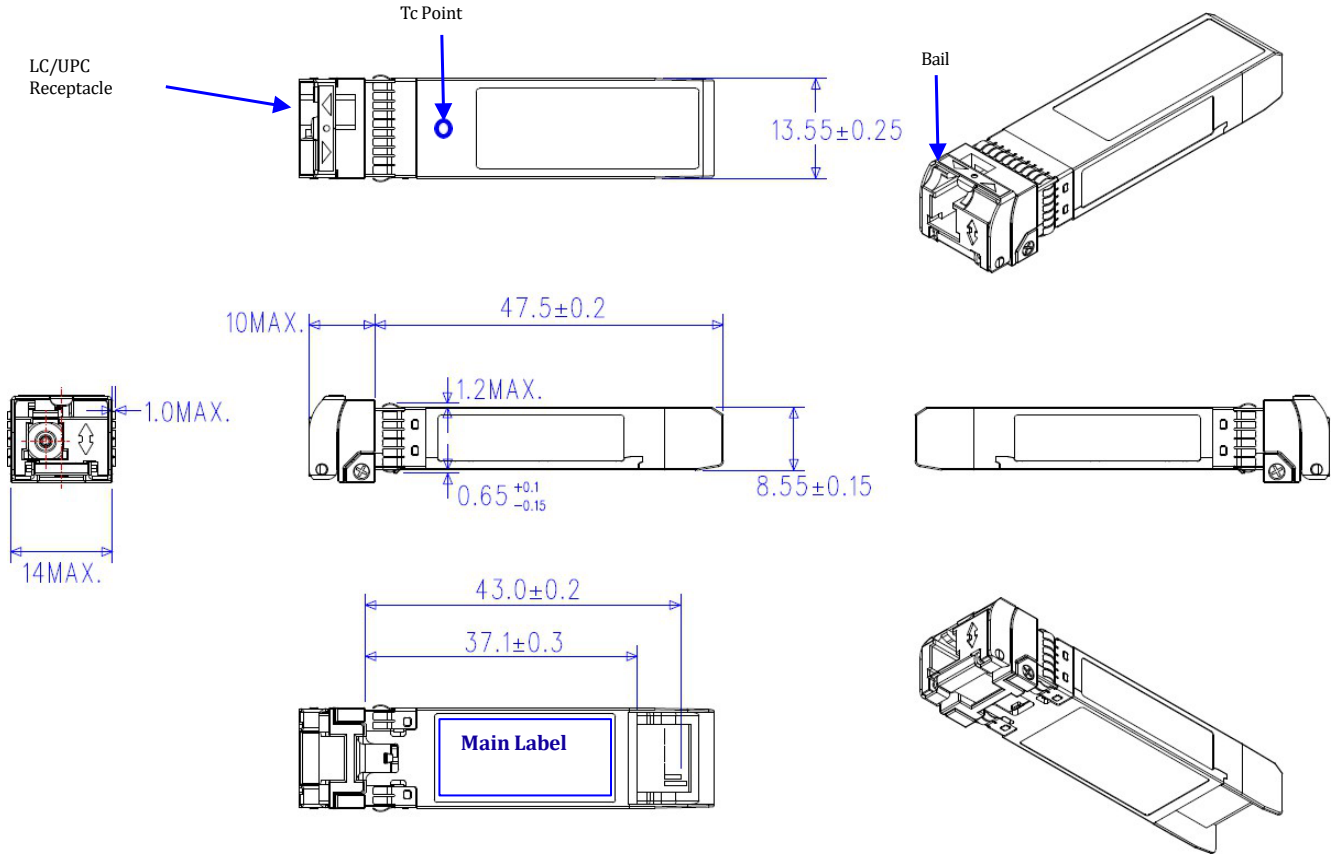

**About AddOn Networks**

In 1999, AddOn Networks entered the market with a single product. Our founders fulfilled a severe shortage for compatible, cost-effective optical transceivers that compete at the same performance levels as leading OEM manufacturers. Adhering to the idea of redefining service and product quality not previously had in the fiber optic networking industry, AddOn invested resources in solution design, production, fulfillment, and global support.

Combining one of the most extensive and stringent testing processes in the industry, an exceptional free tech support center, and a consistent roll-out of innovative technologies, AddOn has continually set industry standards of quality and reliability throughout its history.

Reliability is the cornerstone of any optical fiber network and is ingrained in AddOn's DNA. It has played a key role in nurturing the long-term relationships developed over the years with customers. AddOn remains committed to exceeding industry standards with certifications ranging from NEBS Level 3 to ISO 9001:2015 with every new development while maintaining the signature reliability of its products.




**U.S. Headquarters**

Email: sales@addonnetworks.com

Telephone: +1 877.292.1701

Fax: 949.266.9273

**Europe Headquarters**

Email: salesemea@addonnetworks.com

Telephone: +44 1285 842070