SFP-10GB-HD1-41D-20-AV-AO

ADVA® Compatible TAA 10GBase-CWDM HD1 SFP+ Transceiver (SMF, 1410nm HTx/LRx, 20km, LC, DOM)

Features:

- SFF-8432 and SFF-8472 Compliance
- Simplex LC Connector
- Commercial Temperature 0 to 70 Celsius
- Single-mode Fiber
- Hot Pluggable
- Excellent ESD Protection
- Metal with Lower EMI
- RoHS Compliant and Lead Free



Applications:

- 10 Gigabit Ethernet over CWDM
- Access, Metro and Enterprise

Product Description

This ADVA® compatible SFP+ transceiver provides 10GBase-CWDM HD1 throughput up to 20km over single-mode fiber (SMF) at a bidirectional wavelength of 1410nm HTx/LRx via an LC connector. It can operate at temperatures between 0 and 70C. The listed reach has been determined using a link budget calculation and tested in a standard environment. Actual link distances achieved will be dependent upon the deployed environment. Our transceiver is built to meet or exceed OEM specifications and is guaranteed to be 100% compatible with ADVA®. It has been programmed, uniquely serialized, and tested for data-traffic and application to ensure that it will initialize and perform identically. All of our transceivers comply with Multi-Source Agreement (MSA) standards to provide seamless network integration. This transceiver is Trade Agreements Act (TAA) compliant. We stand behind the quality of our products and proudly offer a limited lifetime warranty.

AddOn's transceivers are RoHS compliant and lead-free.

TAA refers to the Trade Agreements Act (19 U.S.C. & 2501-2581), which is intended to foster fair and open international trade. TAA requires that the U.S. Government may acquire only "U.S.-made or designated country end products."

TAA COMPLIANT

Absolute Maximum Ratings

Parameter	Symbol	Min	Max	Units	Notes
Storage Temperature	Tstg	-40	85	℃	
Operating Case Temperature	Tc	0	70	℃	
Relative Humidity	RH	5	85	%	Non-Condensing
Transmitter Single-Ended Input Voltage	Vp	-0.3	Vcc+0.3	V	
Power Supply Voltage	VccT, VccR	-0.3	3.8	V	
Average Receiver Input Optical Power	Pavg		-5	dBm	

Electrical Characteristics

Parameter	Symbol	Min.	Typ.	Max.	Unit	Notes
Supply Voltage	Vcc	3.135	3.3	3.465	V	
Module Supply Current	Icc			545	mA	1
Power Dissipation	PD			1800	mW	2
Power Supply Noise Tolerance Including Ripple (10Hz~10MHz)				66	mVp-p	3
Low-Speed Signal Electrical Characteristics						
Tx_Fault, Rx_LOS	VOL	-0.3		0.4	V	At 0.7mA
	VOH	-50		37.5	µA	4
Tx_Disable	VIL	-0.3		0.8	V	5
	VIH	2.0		VccT + 0.3	V	5
2-Wire Interface						
Host 2-Wire Vcc	Vcch	3.14		3.46	V	6
SCL and SDA	VOL	0		0.4	V	Rp pulled up to VccT/R, Note 7
	VOH	Vcch – 0.5		Vcch + 0.3	V	
SCL and SDA	VIL	-0.3		VccT*0.3	V	8
	VIH	VccT*0.7		VccT + 0.5	V	
Input Current on the SCL and SDA Contacts	Ii	-10		10	µA	
Capacitance on SCL and SDA Contacts	Ci			14	pF	9
Total Bus Capacitance for SCL and SDA	Cb			100	pF	Note10 At 400kHz, 3.0Ω Rp, Max. At 100kHz, 8.0Ω Rp, Max.
				290	pF	Note10 At 400kHz, 1.1Ω Rp, Max. At 100kHz, 2.7Ω Rp, Max.

Notes:

1. Measured with a 3.3V supply voltage.
2. Supply current includes both VccT and VccR connections.
3. Power noise tolerance test setup shown in figure below.

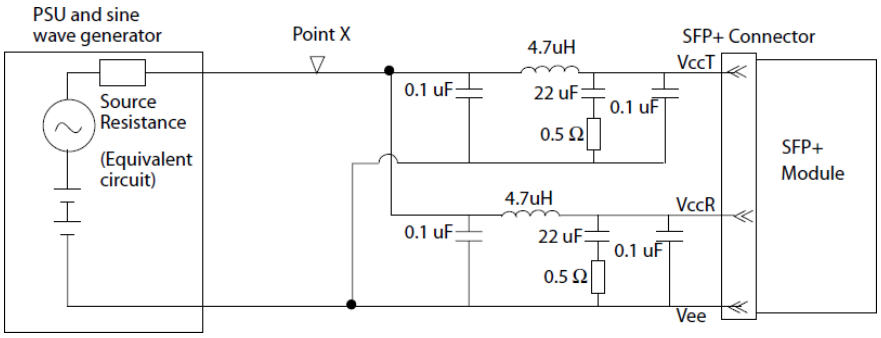

4. Measured with a 4.7kΩ load pull-up to the Host_Vcc.
5. Tx_Disable has an internal 4.7kΩ to 10kΩ pull up to VccT.
6. The Host 2-wire Vcc is the voltage used for resistive pull up for the 2-wire interface.
7. Rp is the pull-up resistor. Active bus termination may be used by the host in place of a pull-up resistor. Pull-ups can be connected to any one of several power supplies; however, the host board design shall ensure that no module contact has voltage exceeding module VccT/R + 0.5V nor requires the module to sink more than 3.0mA current.
8. These voltages are measured on the other side of the connector to the device under test.
9. Ci is the capacitance looking into the module SCL and SDA contacts.
10. Cb is the total bus capacitance on the SCL or SDA bus.

High-Speed Signal Electrical Characteristics

Parameter	Symbol	Min.	Typ.	Max.	Unit	Notes
Tx Input Differential Swing Voltage	VI	190		700	mVp-p	
AC Common-Mode Voltage Tolerance		15			mV	1
Differential Input S-Parameter (Note 1)	SDD11			Note 2	dB	0.01 to 4.1GHz
				Note 3	dB	4.1 to 11.1GHz
Reflected Differential to Common-Mode Conversion	SCD11			-10	dB	0.01 to 11.1GHz
Rx Output Differential Swing Voltage	Vo	300		850	mVp-p	
Termination Mismatch at 1MHz	ΔZM			5	%	
Output AC Common-Mode Voltage				7.5	mV	4
Differential Output S-Parameter	SDD22			Note 5	dB	0.01 to 4.1GHz
				Note 6	dB	4.1 to 11.1GHz
Common-Mode Output Reflection Coefficient	SCC2			Note 7	dB	0.01 to 2.5GHz
				-3	dB	2.5 to 11.1GHz
Rx Output Rise and Fall Time (20-80%)	Tr/Tf	28			Ps	
Rx Output Total Jitter	TJ			0.70	Ulp-p	
Rx Output Deterministic Jitter	DJ			0.42	Ulp-p	

Notes:

1. Measured at B" with Host Compliance Board and Module Compliant Board pair.
2. Reflection Coefficient given by equation SDD11 (dB) < -12 + 2 x SQRT (f), with f in GHz.
3. Reflection Coefficient given by equation SDD11 (dB) < -6.3 + 13 x log10 (f/5.5), with f in GHz.
4. The RMS value is measured by calculating the standard deviation of the histogram for one UI of the common-mode signal.
5. Reflection Coefficient given by equation SDD22 (dB) < -12 + 2 x SQRT (f), with f in GHz.
6. Reflection Coefficient given by equation SDD22 (dB) < -6.3 + 13 x log10 (f/5.5), with f in GHz.
7. Reflection Coefficient given by equation SCC22 (dB) < -7 + 1.6 x f, with f in GHz.

Optical Characteristics

Parameter	Symbol	Min.	Typ.	Max.	Unit	Notes
Transmitter						
Center Wavelength	λC	λC+2.0 to λC+6.5			nm	CWDM, DFB-LD, Note 1
Side-Mode Suppression Ratio	SMSR	30			dB	2
Average Optical Power	Pave	-2		2	dBm	
Optical Modulation Amplitude	POMA	-2.6			dBm	
Spectral Width	Δ λ			1	nm	@ -20dB
Extinction Ratio	ER	4			dB	2
Transmitter and Dispersion Penalty	TDP			3.2	dB	2
Laser Off Power	Poff			-35	dBm	
Relative Intensity Noise	$RIN_{12}OMA$			-128	dB/Hz	2
Transmitter Output Eye Mask	IEEE 802.3-2008 Clause 52.9.7					5
Receiver						
Operating Wavelength	λC	λC- 6.5 to λC- 1.5			nm	1
Average Receiver Sensitivity	S			-19	dBm	3
Receiver Power (Pave) Overload	OL	-5			dBm	3
Sensitivity (OMA) @ 10.3125Gbps	SOMA			-19.6	dBm	3
Receiver Reflectance	RR			-27	dB	@ λO
Loss of Signal - Asserted	P_A	-35			dBm	4
Loss of Signal - De-Asserted	P_D			-19	dBm	4
Loss of Signal - Hysteresis	P_D-P_A	0.5	2.5	5	dB	

Notes:

1. λC = 1271nm, 1291nm, 1311nm, 1331nm, and 1351nm.
2. IEEE 802.3ae Clause 52 compliant.
3. Measured with PRBS 2^{31}-1 at $1x10^{-12}$ BER and 4dB extinction ratio.
4. Loss of Signal (LOS) detection responds only to OMA and the indicator will respond unpredictably with the application of un-modulated optical.

Pin Descriptions

Pin	Symbol	Name/Description	Notes
1	VeeT	Transmitter Signal Ground.	1
2	Tx_Fault	Transmitter Fault (LVTTL-O). “High” indicates a fault condition.	2
3	Tx_Disable	Transmitter Disable (LVTTL-I). “High” or “open” disables the transmitter.	3
4	SDA	2-Wire Serial Interface Data (LVCMOS – I/O). Same as MOD-DEF2 in INF-8074.	4
5	SCL	2-Wire Serial Interface Clock (LVCMOS – I/O). Same as MOD-DEF1 in INF-8074.	4
6	MOD_DEF0	Module Absent (Output). Connected to VeeT or VeeR in the module.	5
7	RS0	Rate Select 0. Not used. Internally pulled down.	
8	Rx_LOS	Receiver Loss of Signal (LVTTL-O).	2
9	RS1	Rate Select 1. Not used. Internally pulled down.	
10	VeeR	Receiver Signal Ground.	1
11	VeeR	Receiver Signal Ground.	1
12	RD-	Receiver Data Out Inverted (CML-O).	
13	RD+	Receiver Data Out (CML-O).	
14	VeeR	Receiver Signal Ground.	
15	VccR	+3.3V Receiver Power.	
16	VccT	+3.3V Transmitter Power.	
17	VeeT	Transmitter Signal Ground.	1
18	TD+	Transmitter Data In (CML-I).	
19	TD-	Transmitter Data In Inverted (CML-I).	
20	VeeT	Transmitter Signal Ground.	1

Notes:

1. The module signal grounds are isolated from the module case.
2. This is an open collector/drain output that on the host board requires a 4.7kΩ to 10kΩ pull-up resistor to the Host_Vcc.
3. This input is internally biased “high” with a 4.7kΩ to 10kΩ pull-up resistor to the VccT.
4. 2-wire serial interface clock and data lines require an external pull-up resistor dependent on the capacitance load.
5. The signals MOD_DEF0, 1, & 2 designate the 2-wire serial interface pins. They must be pulled up with a 4.7kΩ to 10kΩ resistor on the host board. MOD_DEF0 is grounded by the module to indicate that the module is present.

Pin-Out Details

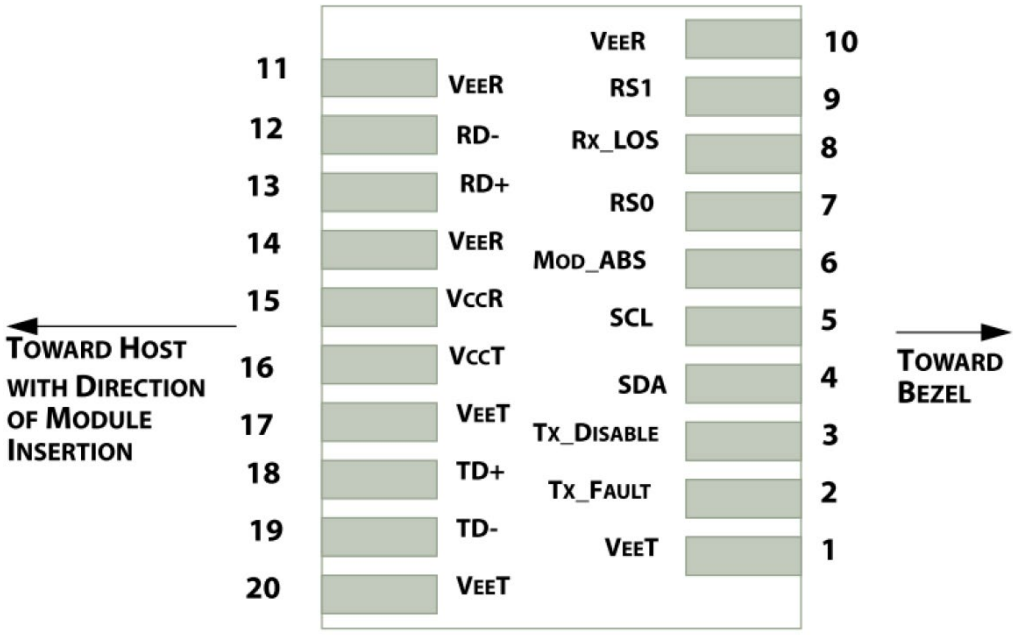

Electrical Pad Layout

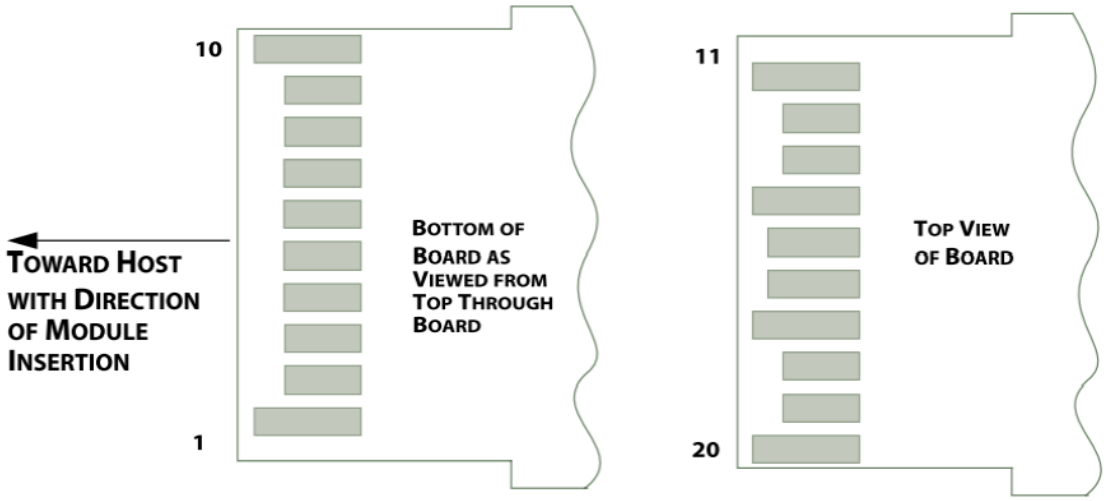

2-Wire Bus Timing Diagram

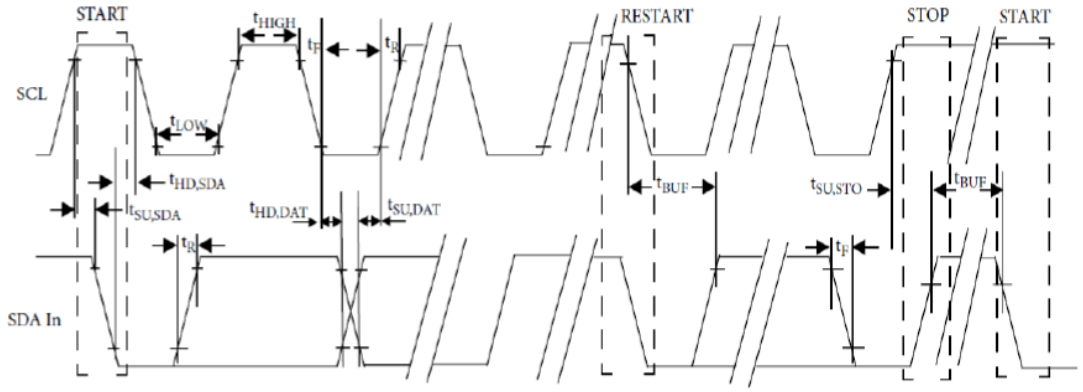

Optical Eye Mask

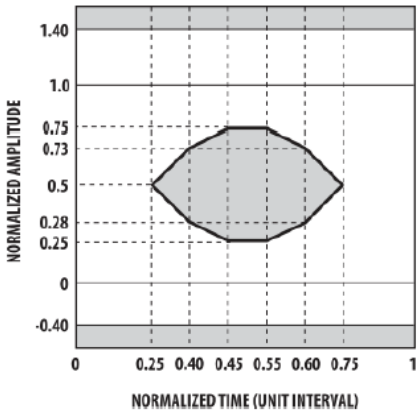

Transmitter Optical Eye Mask Definition

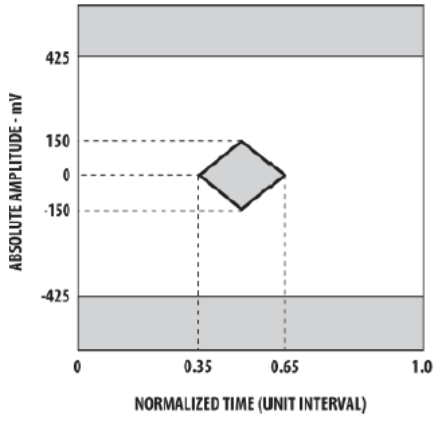

Receiver Electrical Optical Eye Mask Definition

Recommended Application Schematic

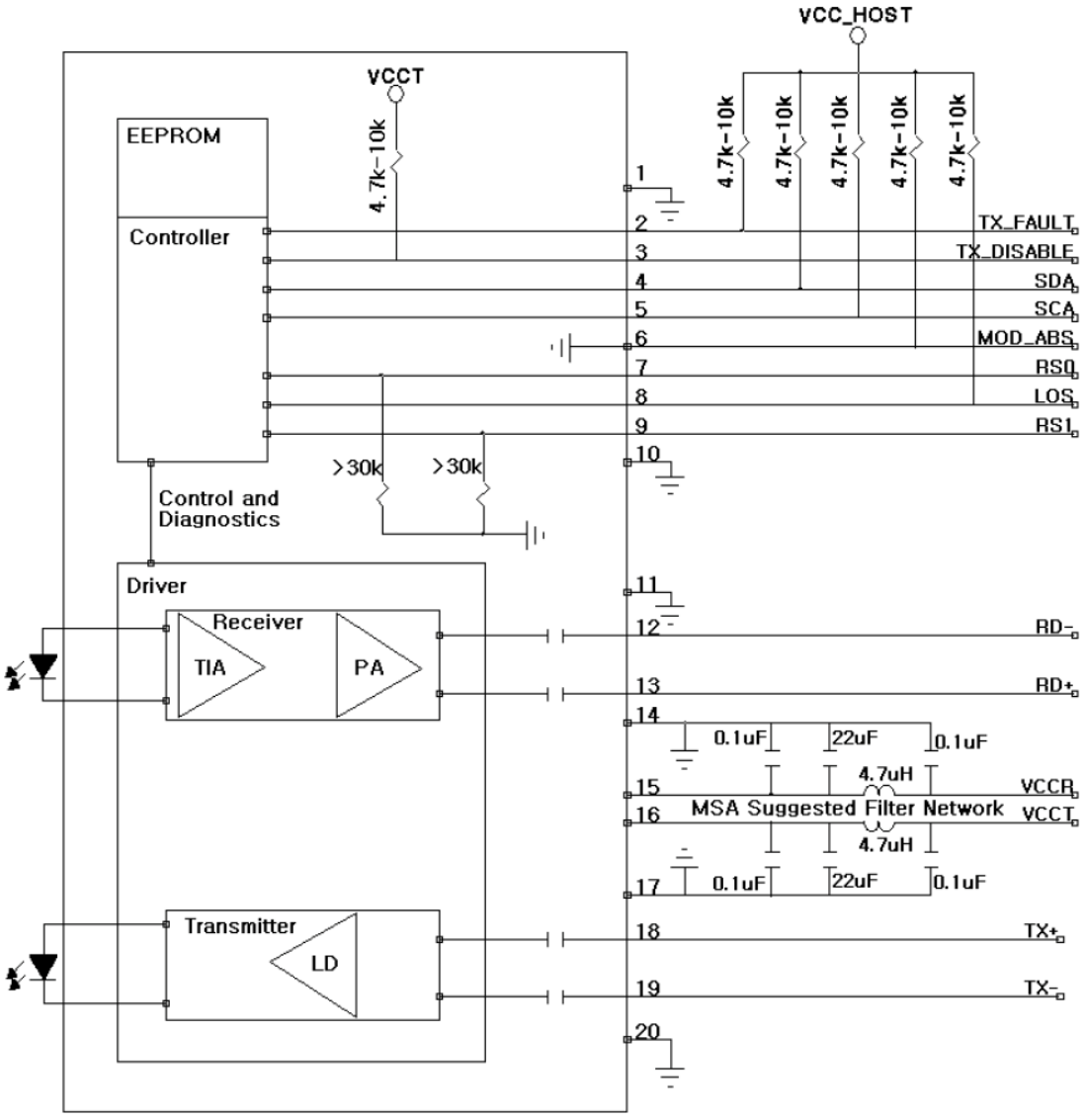

Notes:

1. Tx_Disable: transmitter disable, logic high, 4.7kΩ to 10kΩ pull-up to Vcc on SFP.
2. Tx_Fault: transmitter fault, logic high, 4.7kΩ to 10kΩ pull-up to Vcc on Host.
3. Rx_LOS: receiver loss of signal, logic high, 4.7kΩ to 10kΩ pull-up to Vcc on Host.

Mechanical Specifications

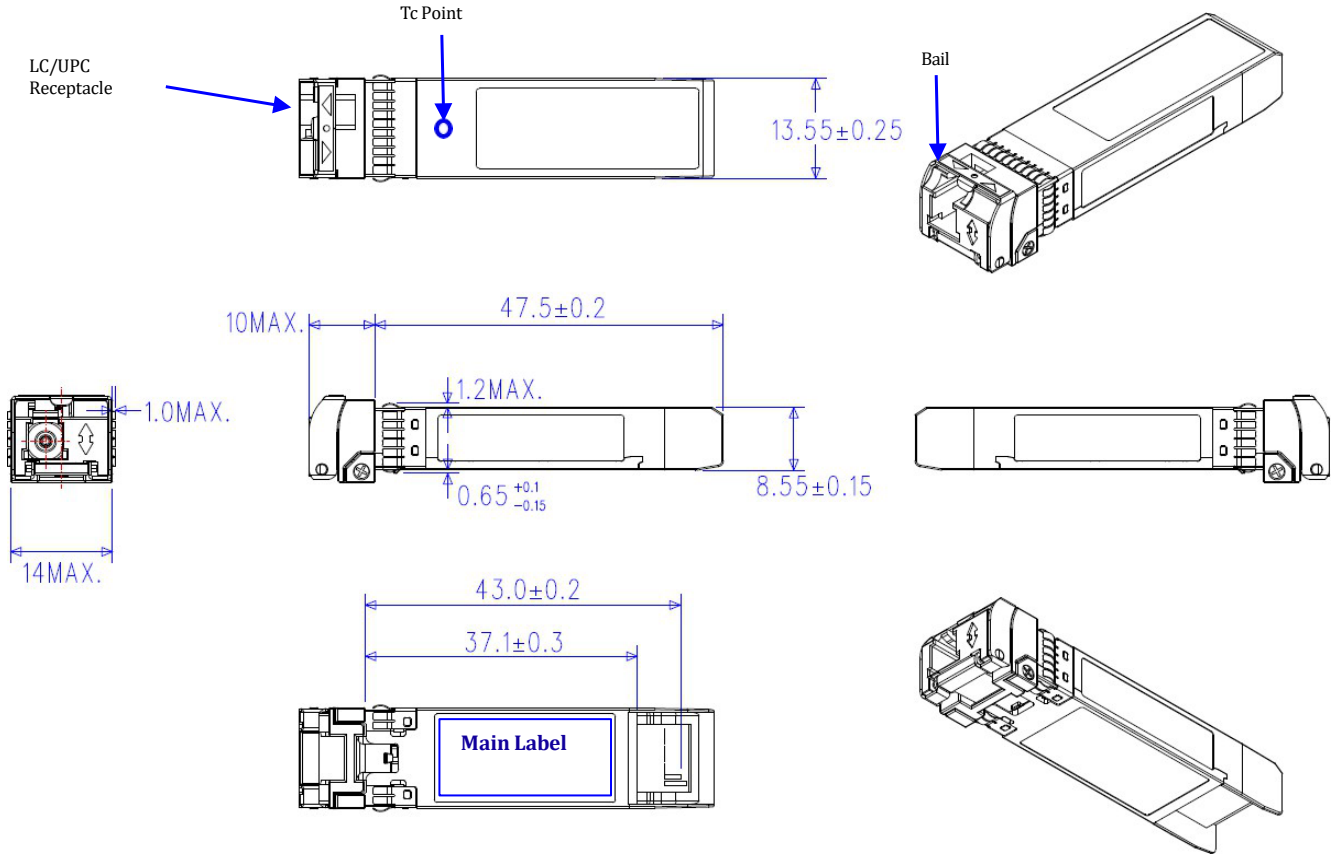

About AddOn Networks

In 1999, AddOn Networks entered the market with a single product. Our founders fulfilled a severe shortage for compatible, cost-effective optical transceivers that compete at the same performance levels as leading OEM manufacturers. Adhering to the idea of redefining service and product quality not previously had in the fiber optic networking industry, AddOn invested resources in solution design, production, fulfillment, and global support.

Combining one of the most extensive and stringent testing processes in the industry, an exceptional free tech support center, and a consistent roll-out of innovative technologies, AddOn has continually set industry standards of quality and reliability throughout its history.

Reliability is the cornerstone of any optical fiber network and is ingrained in AddOn's DNA. It has played a key role in nurturing the long-term relationships developed over the years with customers. AddOn remains committed to exceeding industry standards with certifications ranging from NEBS Level 3 to ISO 9001:2015 with every new development while maintaining the signature reliability of its products.



U.S. Headquarters

Email: sales@addonnetworks.com

Telephone: +1 877.292.1701

Fax: 949.266.9273

Europe Headquarters

Email: salesemea@addonnetworks.com

Telephone: +44 1285 842070