1061701200-02-AO

ADVA® 1061701200-02 Compatible TAA 10GBase-DWDM XFP Transceiver (SMF, 1530nm to 1565nm, 80km, LC, DOM)

Features:

- INF-8077i Compliance
- Duplex LC Connector
- Commercial Temperature 0 to 70 Celsius
- Single-mode Fiber
- Hot Pluggable
- Excellent ESD Protection
- Metal with Lower EMI
- RoHS Compliant and Lead Free



Applications:

- 8x/10x Fibre Channel
- 10x Gigabit Ethernet over DWDM
- Access, Metro and Enterprise

Product Description

This ADVA® 1061701200-02 compatible XFP transceiver provides 10GBase-DWDM throughput up to 80km over single-mode fiber (SMF) using a wavelength of 1530nm to 1565nm via an LC connector. It is guaranteed to be 100% compatible with the equivalent ADVA® transceiver. This easy to install, hot swappable transceiver has been programmed, uniquely serialized and data-traffic and application tested to ensure that it will initialize and perform identically. Digital optical monitoring (DOM) support is also present to allow access to real-time operating parameters. This transceiver is Trade Agreements Act (TAA) compliant. We stand behind the quality of our products and proudly offer a limited lifetime warranty.

AddOn's transceivers are RoHS compliant and lead-free.

TAA refers to the Trade Agreements Act (19 U.S.C. & 2501-2581), which is intended to foster fair and open international trade. TAA requires that the U.S. Government may acquire only "U.S.-made or designated country end products."

TAA COMPLIANT

Regulatory Compliance

- ESD to the Electrical PINs: compatible with MIL-STD-883E Method 3015.4
- ESD to the LC Receptacle: compatible with IEC 61000-4-3
- EMI/EMC compatible with FCC Part 15 Subpart B Rules, EN55022:2010
- Laser Eye Safety compatible with FDA 21CFR, EN60950-1& EN (IEC) 60825-1,2
- RoHS compliant with EU RoHS 2.0 directive 2015/863/EU

Tunable XFP Channel Number and Wavelength

Channel No.	Frequency (THz)	Center Wavelength	Channel No.	Frequency (THz)	Center Wavelength
1	191.35	1566.723	**49**	193.75	1547.316
2	191.40	1566.314	**50**	193.80	1546.917
3	191.45	1565.905	**51**	193.85	1546.518
4	191.50	1565.496	**52**	193.90	1546.119
5	191.55	1565.087	**53**	193.95	1545.720
6	191.60	1564.679	**54**	194.00	1545.322
7	191.65	1564.271	**55**	194.05	1544.924
8	191.70	1563.863	**56**	194.10	1544.526
9	191.75	1563.455	**57**	194.15	1544.128
10	191.80	1563.047	**58**	194.20	1543.730
11	191.85	1562.640	**59**	194.25	1543.333
12	191.90	1562.233	**60**	194.30	1542.936
13	191.95	1561.826	**61**	194.35	1542.539
14	192.00	1561.419	**62**	194.40	1542.142
15	192.05	1561.013	**63**	194.45	1541.746
16	192.10	1560.606	**64**	194.50	1541.349
17	192.15	1560.200	**65**	194.55	1540.953
18	192.20	1559.794	**66**	194.60	1540.557
19	192.25	1559.389	**67**	194.65	1540.162
20	192.30	1558.983	**68**	194.70	1539.766
21	192.35	1558.578	**69**	194.75	1539.371
22	192.40	1558.173	**70**	194.80	1538.976
23	192.45	1557.768	**71**	194.85	1538.581
24	192.50	1557.363	**72**	194.90	1538.186
25	192.55	1556.959	**73**	194.95	1537.792
26	192.60	1556.555	**74**	195.00	1537.397
27	192.65	1556.151	**75**	195.05	1537.003

28	192.70	1555.747	**76**	195.10	1536.609
29	192.75	1555.343	**77**	195.15	1536.216
30	192.80	1554.940	**78**	195.20	1535.822
31	192.85	1554.537	**79**	195.25	1535.429
32	192.90	1554.134	**80**	195.30	1535.036
33	192.95	1553.731	**81**	195.35	1534.643
34	193.00	1553.329	**82**	195.40	1534.250
35	193.05	1552.926	**83**	195.45	1533.858
36	193.10	1552.524	**84**	195.50	1533.465
37	193.15	1552.122	**85**	195.55	1533.073
38	193.20	1551.721	**86**	195.60	1532.681
39	193.25	1551.319	**87**	195.65	1532.290
40	193.30	1550.918	**88**	195.70	1531.898
41	193.35	1550.517	**89**	195.75	1531.507
42	193.40	1550.116	**90**	195.80	1531.116
43	193.45	1549.715	**91**	195.85	1530.725
44	193.50	1549.315	**92**	195.90	1530.334
45	193.55	1548.915	**93**	195.95	1529.944
46	193.60	1548.515	**94**	196.00	1529.553
47	193.65	1548.115	**95**	196.05	1529.163
48	193.70	1547.715	**96**	196.10	1528.773

Absolute Maximum Ratings

Parameter	Symbol	Min.	Typ.	Max.	Unit	Notes
Storage Temperature	Tstg	-40		85	°C	
Case Temperature		-5		70	°C	
ESD		500			V	High Speed i/o pins
		2000				All other pins
Receiver optical input power				+12	dBm	

Electrical Characteristics

Parameter	Symbol	Min.	Typ.	Max.	Unit	Notes
1.8V Supply	Vcc2	1.71	1.8	1.89	V	VPS not supported
3.3V Supply	Vcc3	3.15	3.3	3.45	V	
5.0V Supply	Vcc5	4.75	5.0	5.25	V	
Supply Current, 1.8V			160	200	mA	
Supply Current, 3.3V			310	400	mA	
Supply Current, 5.0V			100	200	mA	
Inrush current limit				100	mA/µs	
Total power consumption				2.5	W	Power Level 2 MSA classification

System Performance

Parameter	Min	Max	OSNR	BER	Conditions
Noise Loaded	-400ps/nm	1500ps/nm	19dB	1E-04	10.709Gb/s, -10 to -20dBm, 0.25nm filter, optimised RxDTV
Unamplified Links	0ps/nm	1600ps/nm	>35dB	1E-12	10.709Gb/s, -22dBm, 0.25nm filter, optimised RxDTV

Optical Characteristics

Parameter	Symbol	Min.	Typ.	Max.	Unit	Conditions
Transmitter						
Data Rate		9.95		11.35	Gb/s	NRZ
Frequency range		191.35		196.10	THz	50GHz grid, 96 channels
Frequency accuracy		-2.5		+2.5	GHz	EOL
Optical transmit power	Po		+0.5		dBm	SOL, 25°C
Optical transmit power	Po	-1		+3.0	dBm	EOL
Shuttered output power			-45	-40	dBm	
Optical power stability	ΔPout	-1.0		+1.0	dB	All channels, SOL
Side mode suppression	SMSR	35			dB	±2.5nm, modulated
Spectral width	Δλ		0.3	0.5	nm	-20dB, modulated
Extinction ratio	ER	9.5			dB	Filtered, 10.709Gb/s
Eye diagram compliance	GR-253, ITU-T G.691					
Mask margin		10			%	
OSNR		50	55		dB	0.1nm RBW
SBS threshold		18			dBm	50km SMF
Tuning speed				50	ms	
Laser enable (turn on) time				50	ms	To >90% power
Laser disable (turn off) time				10	µs	To <10% power
Module initialization time				20	s	
Receiver						
Data rate		9.95		11.35	Gb/s	NRZ
Input operating wavelength	λ	1525		1575	nm	
Receiver Sensitivity			-26		dBm	10.709 Gb/s, IE-12, OSNR>35dB, optimized RxDTV
Maximum input power (overload)	Pin MAX	-5			dBm	
LOS assert	PA	-33		-28.5	dBm	
LOS de-assert	PD	-32.5		-26.5	dBm	
LOS Hysteresis	PD - PA	0.5		4	dB	
LOS assert time	T_A			100	µs	
LOS de-assert time	T_D			100	µs	

Pin Descriptions

Pin	Logic	Symbol	Name/Descriptions	Notes
1		GND	Module Ground	1
2		VEE5	Optional -5.2V Power Supply	
3	LVTTL-I	Mod-Desel	Module De-select, when held low allows the module torespond to 2-wire serial interface commands	
4	LVTTL-O	Interrupt	Interrupt; Indicates presence of an important condition which can beread over the serial 2-wire interface	2
5	LVTTL-I	TX_DIS	Transmitter Disable; Turns off transmitter laser output	
6		VCC5	+5V Power Supply	
7		GND	Module Ground	1
8		VCC3	+3.3V Power Supply	
9		VCC3	+3.3V Power Supply	
10	LVTTL-I/O	SCL	2-wire Serial interface clock	2
11	LVTTL-I/O	SDA	2-wire Serial interface data line	2
12	LVTTL-O	Mod_Abs	Indicates Module is not present. Grounded in the Module	2
13	LVTTL-O	Mod_NR	Module Not Ready; Indicating Module Operational Fault	2
14	LVTTL-O	RX_LOS	Receiver Loss Of Signal Indicator	2
15		GND	Module Ground	1
16		GND	Module Ground	1
17	CML-O	RD-	Receiver Inverted Data Output	
18	CML-O	RD+	Receiver Non-Inverted Data Output	
19		GND	Module Ground	1
20		VCC2	+1.8V Power Supply	3
21	LVTTL-I	P Down/RST	Power down; When high, requires the module to limit power consumption to 1.5W or below. 2-Wire serial interface must be functional in the low power mode.	
			Reset; The falling edge initiates a complete reset of the module including the 2-wire serial interface, equivalent to a power cycle	
22		VCC2	+1.8V Power Supply	3
23		GND	Module Ground	1
24	PECL-I	RefCLK+	Not required	
25	PECL-I	RefCLK-	Not required	
26		GND	Module Ground	1
27		GND	Module Ground	1
28	CML-I	TD-	Transmitter Inverted Data Input	
29	CML-I	TD+	Transmitter Non-Inverted Data Input	
30		GND	Module Ground	1

Notes:

1. Module ground pins (GND) are isolated from the module case and chassis ground within the module.
2. Shall be pulled up with 4.7K-10kOhms to a voltage between 3.15V and 3.45V on the host board.
3. Variable Power Supply (VPS) function is not supported.

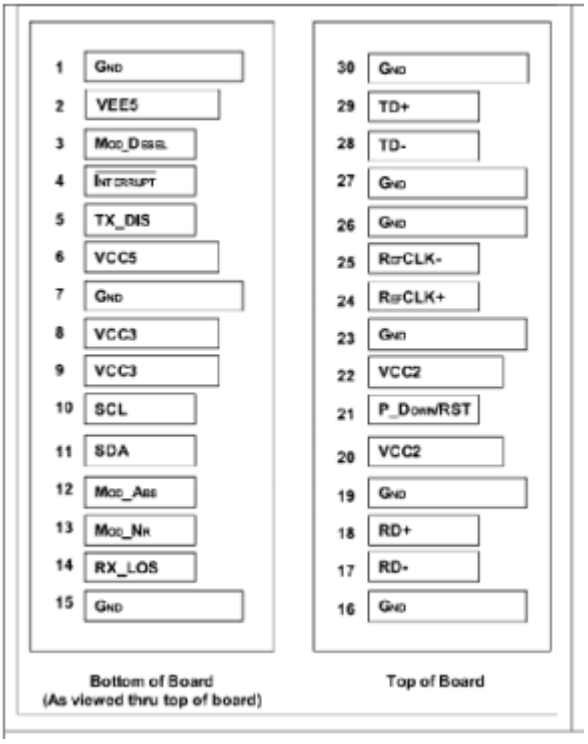

Recommended Pattern Layout

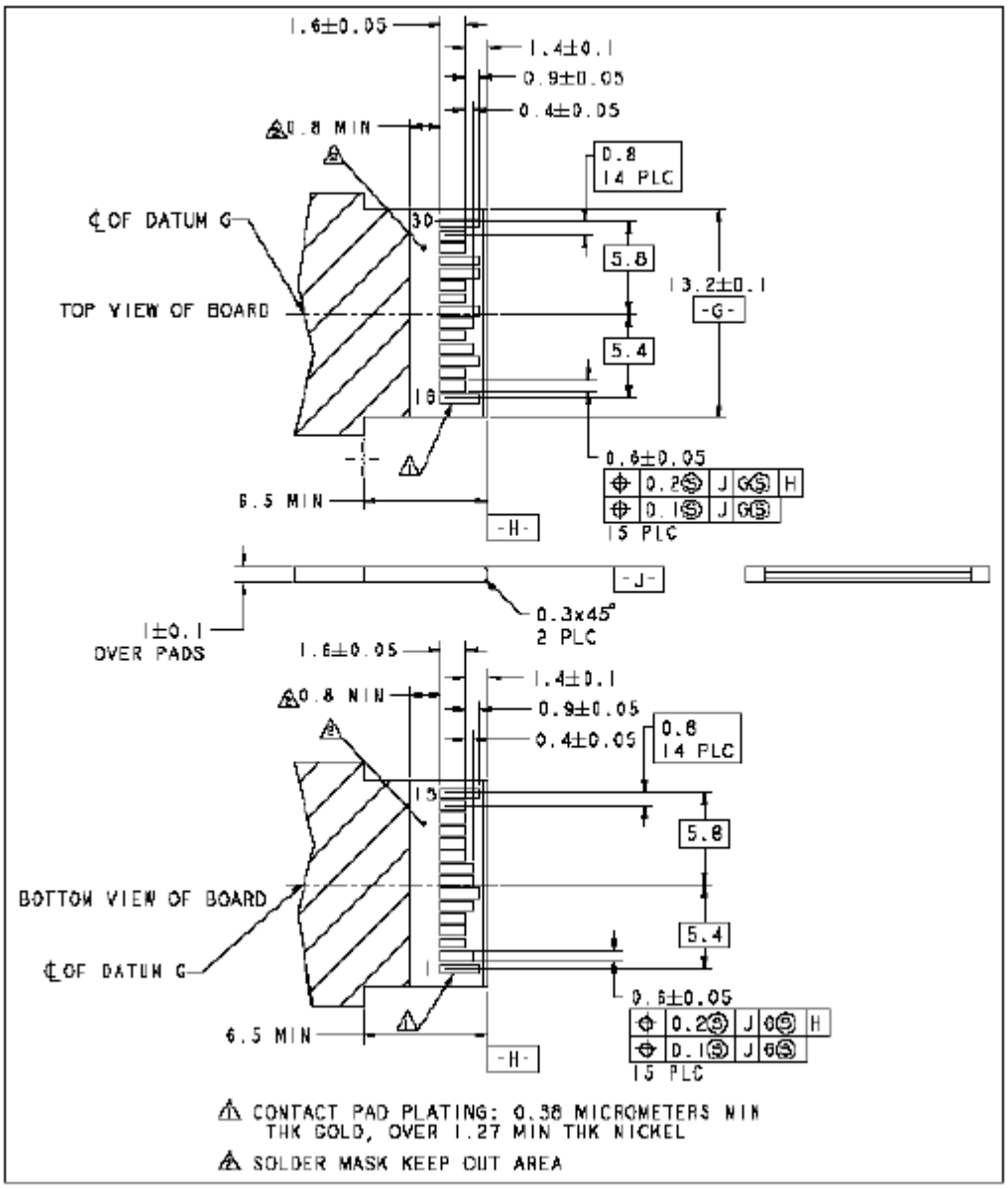

Power Supply Noise Tolerance

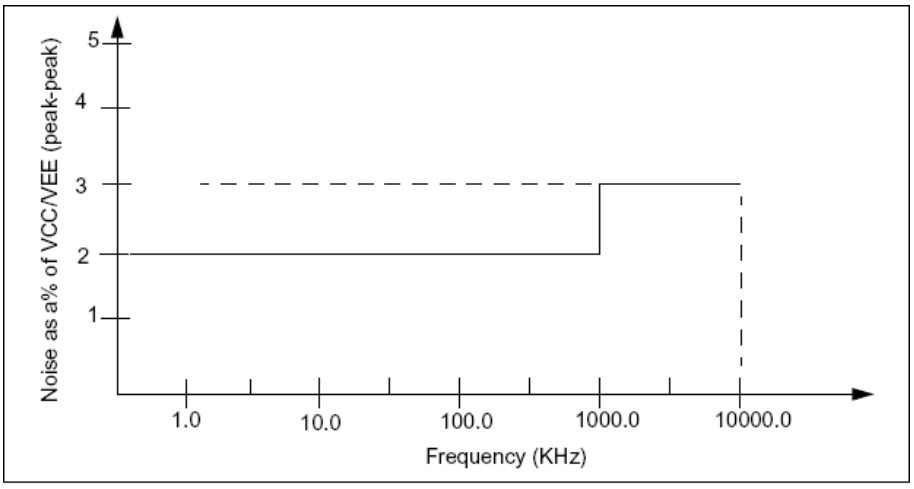

Figure 2 Power Noise Requirement

Mechanical Specifications

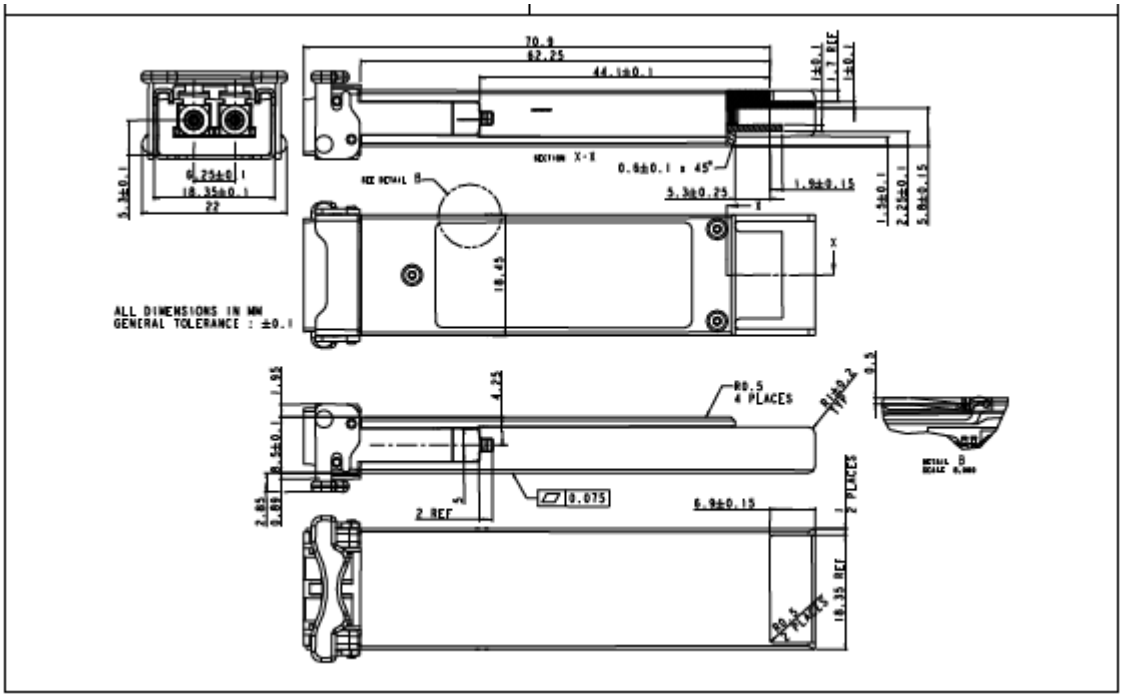

About AddOn Networks

In 1999, AddOn Networks entered the market with a single product. Our founders fulfilled a severe shortage for compatible, cost-effective optical transceivers that compete at the same performance levels as leading OEM manufacturers. Adhering to the idea of redefining service and product quality not previously had in the fiber optic networking industry, AddOn invested resources in solution design, production, fulfillment, and global support.

Combining one of the most extensive and stringent testing processes in the industry, an exceptional free tech support center, and a consistent roll-out of innovative technologies, AddOn has continually set industry standards of quality and reliability throughout its history.

Reliability is the cornerstone of any optical fiber network and is ingrained in AddOn's DNA. It has played a key role in nurturing the long-term relationships developed over the years with customers. AddOn remains committed to exceeding industry standards with certifications ranging from NEBS Level 3 to ISO 9001:2015 with every new development while maintaining the signature reliability of its products.



U.S. Headquarters

Email: sales@addonnetworks.com

Telephone: +1 877.292.1701

Fax: 949.266.9273

Europe Headquarters

Email: salesemea@addonnetworks.com

Telephone: +44 1285 842070