J9285B-AOC-7M-AO

HP® Compatible TAA Compliant 10GBase-AOC SFP+ to SFP+ Active Optical Cable (850nm, MMF, 7m)

Features

- High Speed/ High Density: Supports up to 10Gbps bi-directional operation
- Reliable VCSEL and PIN photonic devices
- Compliant to SFP MSA Standards
- Excellent High Speed Signal Interface
- Operating Temperature: 0 to 70 Celsius
- I2C Standard Management Interface
- RoHS Compliant and Lead-Free

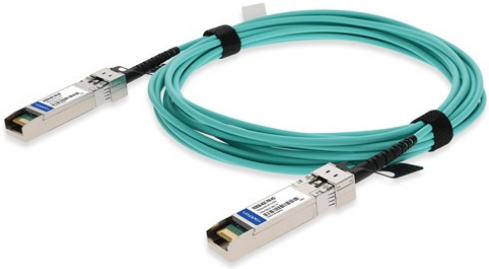

Applications

- x

Product Description

This is an HP® compatible 10GBase-AOC SFP+ to SFP+ active optical cable that operates over active fiber with a maximum reach of 7m. At a wavelength of 850nm, it has been programmed, uniquely serialized, and data-traffic and application tested to ensure it is 100% compliant and functional. This active optical cable is TAA (Trade Agreements Act) compliant, and is built to comply with MSA (Multi-Source Agreement) standards. We stand behind the quality of our products and proudly offer a limited lifetime warranty.

AddOn's transceivers are RoHS compliant and lead-free.

TAA refers to the Trade Agreements Act (19 U.S.C. & 2501-2581), which is intended to foster fair and open international trade. TAA requires that the U.S. Government may acquire only "U.S.-made or designated country end products.")

TAA COMPLIANT

Absolute Maximum Ratings

Parameter	Symbol	Min.	Typ.	Max.	Unit	Notes
Storage Temperature	Tstg	-40		85	°C	
Operating Temperature	Tc	0	25	70	°C	
Relative Humidity	RH	5		85	%	
Maximum Supply Voltage	Vcc	0		3.6	V	
Data Rate			10.3		Gbps	

Electrical Characteristics

Parameter	Symbol	Min.	Typ.	Max.	Unit	Notes
Supply Voltage	Vcc	3.135	3.3	3.465	V	
+3.3V Supply Current	Icc			290	mA	
Transmitter Fault (Tx_Fault)	VOH	2.0		Vcc	V	1
Loss of Signal (LOS)	VOL	0		0.8	V	1
Transmitter Disable (Tx_Disable)	VIH	2.0		Vcc	V	2
MOD_DEF1, MOD_DEF2	VIL	0		0.8	V	2
Clock Rate-I2C						3

Notes:

1. For all control input pins: Tx_Disable.
2. For all status output pins: Rx_LOS, Tx_Fault.
3. For the management interface.

Optical Characteristics

Parameter	Symbol	Min.	Typ.	Max.	Unit	Notes
Transmitter						
Reference Differential Input Impedance	ZD		100		Ω	1
Signal Speed			10.3		Gbps	2
Differential Data Input Swing	VIN,pp	180		700	mV	
Receiver						
Reference Differential Input Impedance	ZD		100		Ω	1
Signal Speed			10.3		Gbps	2
Differential Data Output Swing		150		850	mV	
Differential Data Output Swing When Squelched				50	mV	
Rise/Fall Time (20-80%)		24			ps	

Notes:

1. AC coupled inside the AOC module.
2. Tested with PRBS 2^{31}-1 and BER:10^{-12}.

Pin Descriptions

Pin	Symbol	Name/Description	Notes
1	VeeT	Transmitter Ground.	1
2	Tx_Fault	Transmitter Fault (LVTTL-O). “High” indicates a fault condition.	2
3	Tx_Disable	Transmitter Disable (LVTTL-I). “High” or “open” disables the transmitter.	3
4	SDA	2-Wire Serial Interface Data Line. LVCMOS-I/O. MOD_DEF2.	4
5	SCL	2-Wire Serial Interface Clock Line. LVCMOS-I/O. MOD_DEF1.	4
6	MOD_ABS	Module Absent (Output). Connected to the VeeT or VeeR in the module.	5
7	RS0	Rate Select 0. Not Used. Presents high input impedance.	
8	Rx_LOS	Receiver Loss of Signal. LVTTL-O.	2
9	RS1	Rate Select 1. Not Used. Presents high input impedance.	
10	VeeR	Receiver Ground.	1
11	VeeR	Receiver Ground.	1
12	RD-	Inverse Received Data Out (CML-O).	
13	RD+	Received Data Out (CML-O).	
14	VeeR	Receiver Ground.	
15	VccR	+3.3V Receiver Power.	
16	VccT	+3.3V Transmitter Power.	
17	VeeT	Transmitter Ground.	1
18	TD+	Transmitter Data In (CML-I).	
19	TD-	Inverse Transmitter Data In (CML-I).	
20	VeeT	Transmitter Ground.	1

Notes:

1. The module signal grounds are isolated from the module case.
2. This is an open collector/drain output that, on the host board, requires a 4.7kΩ to 10kΩ pull-up resistor to the Host_Vcc.
3. This input is internally biased "high" with a 4.7kΩ to 10kΩ pull-up resistor to the VccT.
4. 2-Wire Serial Interface Clock and Data Lines require an external pull-up resistor dependent on the capacitance load.
5. This is a ground return that, on the host board, requires a 4.7kΩ to 10kΩ pull-up resistor to the Host_Vcc.

Pin-Out Connectors

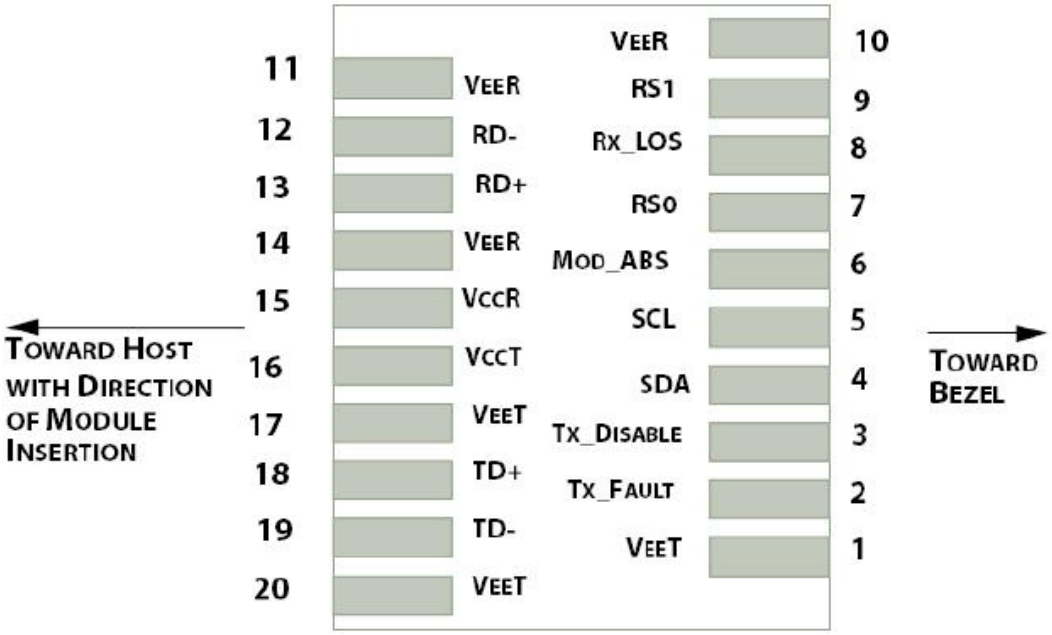

Application Interface Circuit

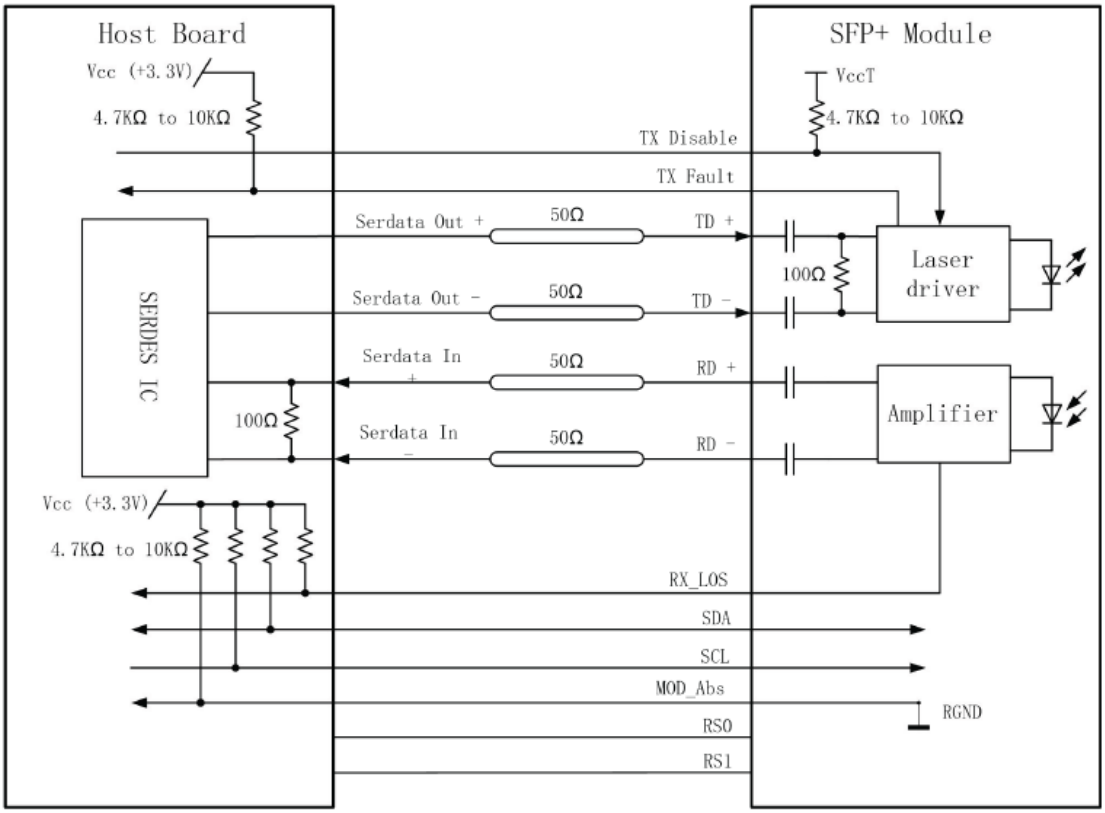

Mechanical Specifications

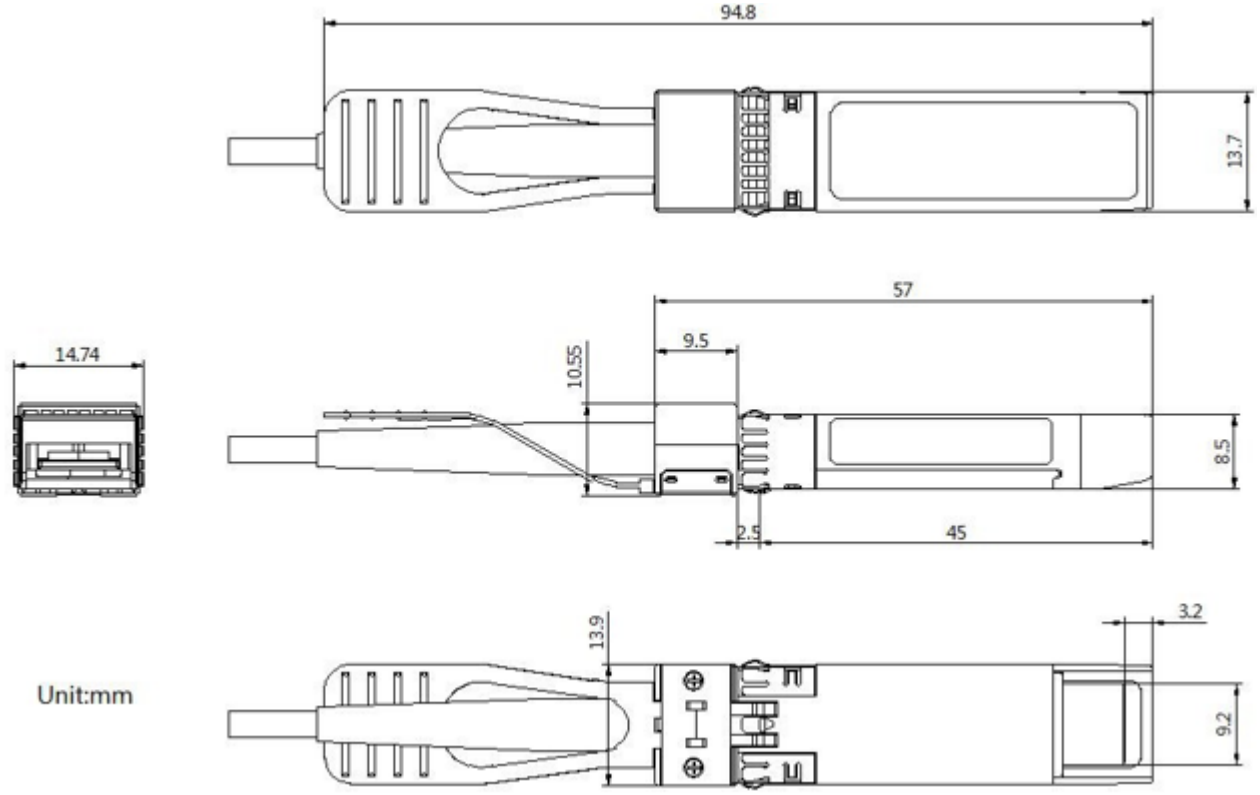

Parameter	Symbol	Min.	Typ.	Max.	Unit	Notes
Module Retention		90		170	N	
Module Insertion		0		18	N	
Module Extraction		0		25	N	
Cable Pull Strength – Apply Load at 0°		25			N	
Cable Pull Strength – Apply Load at 90°		20			N	
Cable Bending Radius		50			mm	
Insertion/Removal Cycles		50			Cycles	

About AddOn Networks

In 1999, AddOn Networks entered the market with a single product. Our founders fulfilled a severe shortage for compatible, cost-effective optical transceivers that compete at the same performance levels as leading OEM manufacturers. Adhering to the idea of redefining service and product quality not previously had in the fiber optic networking industry, AddOn invested resources in solution design, production, fulfillment, and global support.

Combining one of the most extensive and stringent testing processes in the industry, an exceptional free tech support center, and a consistent roll-out of innovative technologies, AddOn has continually set industry standards of quality and reliability throughout its history.

Reliability is the cornerstone of any optical fiber network and is ingrained in AddOn's DNA. It has played a key role in nurturing the long-term relationships developed over the years with customers. AddOn remains committed to exceeding industry standards with certifications ranging from NEBS Level 3 to ISO 9001:2015 with every new development while maintaining the signature reliability of its products.



U.S. Headquarters

Email: sales@addonnetworks.com

Telephone: +1 877.292.1701

Fax: 949.266.9273

Europe Headquarters

Email: salesemea@addonnetworks.com

Telephone: +44 1285 842070