QSFP28-100GB-CWDM4-ECI-AO

ECI Telecom® Compatible TAA 100GBase-CWDM4 QSFP28 Transceiver (SMF, 1270nm to 1330nm, 2km, LC, DOM)

Features:

- SFF-8665 Compliance
- Duplex LC Connector
- Commercial Temperature 0 to 70 Celsius
- Single-mode Fiber
- Hot Pluggable
- Excellent ESD Protection
- Metal with Lower EMI
- RoHS Compliant and Lead Free

Applications:

- Ethernet over CWDM
- Access, Metro and Enterprise

Product Description

This ECI Telecom® compatible QSFP28 transceiver provides 100GBase-CWDM4 throughput up to 2km over single-mode fiber (SMF) using wavelengths between 1270nm to 1330nm via an LC connector. It can operate at temperatures between 0 and 70C. Our transceiver is built to meet or exceed OEM specifications and is guaranteed to be 100% compatible with ECI Telecom®. It has been programmed, uniquely serialized, and tested for data-traffic and application to ensure that it will initialize and perform identically. All of our transceivers comply with Multi-Source Agreement (MSA) standards to provide seamless network integration. Additional product features include Digital Optical Monitoring (DOM) support which allows access to real-time operating parameters. This transceiver is Trade Agreements Act (TAA) compliant. We stand behind the quality of our products and proudly offer a limited lifetime warranty.

AddOn's transceivers are RoHS compliant and lead-free.

TAA refers to the Trade Agreements Act (19 U.S.C. & 2501-2581), which is intended to foster fair and open international trade. TAA requires that the U.S. Government may acquire only "U.S.-made or designated country end products."

TAA COMPLIANT

Regulatory Compliance

- ESD to the Electrical PINs: compatible with MIL-STD-883E Method 3015.4
- ESD to the LC Receptacle: compatible with IEC 61000-4-3
- EMI/EMC compatible with FCC Part 15 Subpart B Rules, EN55022:2010
- Laser Eye Safety compatible with FDA 21CFR, EN60950-1& EN (IEC) 60825-1,2
- RoHS compliant with EU RoHS 2.0 directive 2015/863/EU

Absolute Maximum Ratings

Parameter	Symbol	Min.	Typ	Max.	Unit
Maximum Supply Voltage	Vcc	-0.5		4.0	V
Storage Temperature	TS	-40		+85	°C
Operating Case Temperature	Tc	0	25	70	°C
Relative Humidity	RH	5		95	%
Data Rate PER Channel			25.78125		Gb/s

Electrical Characteristics

Parameter	Symbol	Min.	Typ.	Max.	Unit	Notes
Power Supply Voltage	Vcc	3.135	3.3	3.465	V	
Power Dissipation	PD			3500	mW	
Module Supply Current	Icc			1100	mA	
Transmitter						
Single-ended Input Voltage Tolerance	ZIN	-0.3		4.0	V	
Input Differential Impedance	VIN, P-P		100		Ω	
Differential Data Input Swing		190		700	mV_{P-P}	
AC Common Mode Input Voltage Tolerance		15			mV	
Differential Input Voltage Swing Threshold		50			mVpp	
Receiver						
Single-ended Output Voltage		-0.3		4.0	V	
Output Differential Impedance	Zo	90	100	110	Ω	
Differential Data Output Swing	VOUT, P-P	300		850	mVP-P	
AC Common Mode Output Voltage				7.5	mV	

Optical Characteristics

Parameter	Symbol	Min.	Typ.	Max.	Unit	Notes
Transmitter						
Launch Optical Power per lane	Po	-6.5		2.5	dBm	1
Total Launch Optical Power	Po			+8.5	dBm	1
Center Wavelength Range	L1	1264.5	1271	1277.5	nm	
	L2	1284.5	1291	1297.5	nm	
	L3	1304.5	1311	1317.5	nm	
	L4	1324.5	1331	1337.5	nm	
Extinction Ratio	EX	4			dB	2
Spectral width (-20dB)	Δλ			1	nm	
Side-mode suppression ratio	SMSR	30			dB	
Optical Return Loss Tolerance	ORLT			20	dB	
Pout @TX-Disable Asserted				-30		1
Eye Mask {X1, X2, X3, Y1, Y2, Y3}		{0.31, 0.4, 0.45, 0.34, 0.38, 0.4}				
Receiver						
Center Wavelength	L1	1264.5	1271	1277.5	nm	
	L2	1284.5	1291	1297.5	nm	
	L3	1304.5	1311	1317.5	nm	
	L4	1324.5	1331	1337.5	nm	
Sensitivity per Channel	S			-11.5	dBm	3
Overload (each channel)	POL	2.5			dBm	3
Damage Threshold (each channel)	Pdamage	3.5			dBm	
Optical Return Loss	ORL	26			dB	
LOS Assert	LOSA	-24			dBm	
LOS De-Assert	LOSD			-12.0	dBm	
LOS Hysteresis		0.5			dB	

Notes:

1. The optical power is launched into SMF.
2. Measured with a PRBS 2^{31}-1 test pattern @25.78125Gbps.
3. Measured with PRBS 2^{31}-1 test pattern, 25.78125Gb/s, BER 5.0E-5

Pin Descriptions

Pin	Symbol	Name/Descriptions	Ref.
1	GND	Transmitter Ground (Common with Receiver Ground)	1
2	Tx2-	Transmitter Inverted Data Input	
3	Tx2+	Transmitter Non-Inverted Data output	
4	GND	Transmitter Ground (Common with Receiver Ground)	1
5	Tx4-	Transmitter Inverted Data Input	
6	Tx4+	Transmitter Non-Inverted Data output	
7	GND	Transmitter Ground (Common with Receiver Ground)	1
8	ModSelL	Module Select	2
9	ResetL	Module Reset	2
10	VccRx	3.3V Power Supply Receiver	
11	SCL	2-Wire serial Interface Clock	2
12	SDA	2-Wire serial Interface Data	2
13	GND	Transmitter Ground (Common with Receiver Ground)	1
14	Rx3+	Receiver Non-Inverted Data Output	
15	Rx3-	Receiver Inverted Data Output	
16	GND	Transmitter Ground (Common with Receiver Ground)	1
17	Rx1+	Receiver Non-Inverted Data Output	
18	Rx1-	Receiver Inverted Data Output	
19	GND	Transmitter Ground (Common with Receiver Ground)	1
20	GND	Transmitter Ground (Common with Receiver Ground)	1
21	Rx2-	Receiver Inverted Data Output	
22	Rx2+	Receiver Non-Inverted Data Output	
23	GND	Transmitter Ground (Common with Receiver Ground)	1
24	Rx4-	Receiver Inverted Data Output	1
25	Rx4+	Receiver Non-Inverted Data Output	
26	GND	Transmitter Ground (Common with Receiver Ground)	1
27	ModPrsl	Module Present	
28	IntL	Interrupt	2
29	VccTx	3.3V power supply transmitter	
30	Vcc1	3.3V power supply	
31	LPMode	Low Power Mode	2
32	GND	Transmitter Ground (Common with Receiver Ground)	1
33	Tx3+	Transmitter Non-Inverted Data Input	
34	Tx3-	Transmitter Inverted Data Output	
35	GND	Transmitter Ground (Common with Receiver Ground)	1
36	Tx1+	Transmitter Non-Inverted Data Input	
37	Tx1-	Transmitter Inverted Data Output	
38	GND	Transmitter Ground (Common with Receiver Ground)	1

Notes:

1. The module signal grounds are isolated from the module case.
2. This is an open collector/drain output that on the host board requires a a 4.7KΩ to 10KΩ pull-up resistor to VccHost.

Electrical Pin-out Details

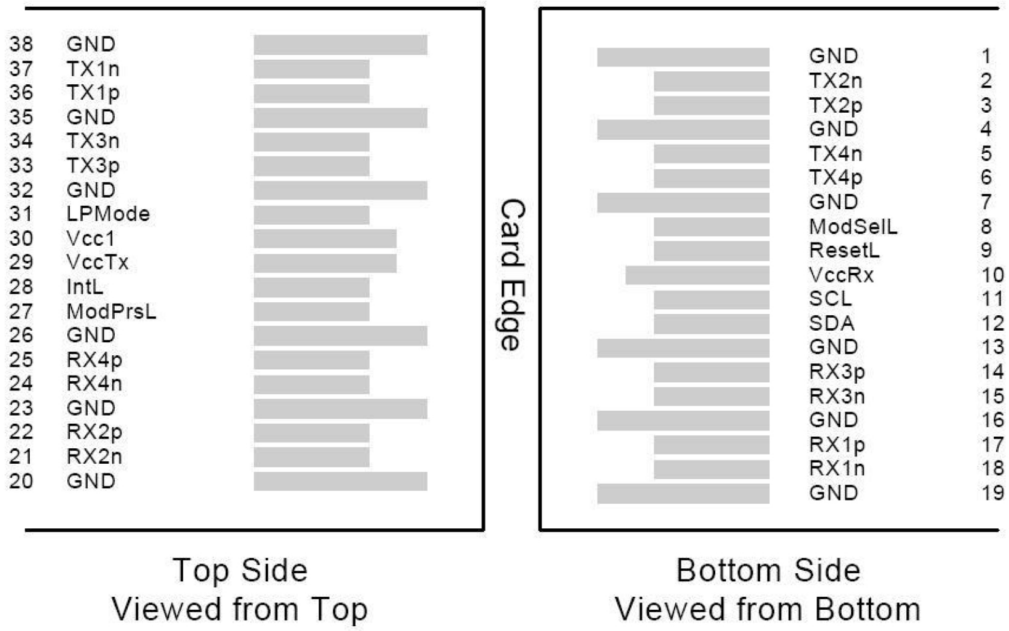

Recommended Host Board Power Supply Filter Network

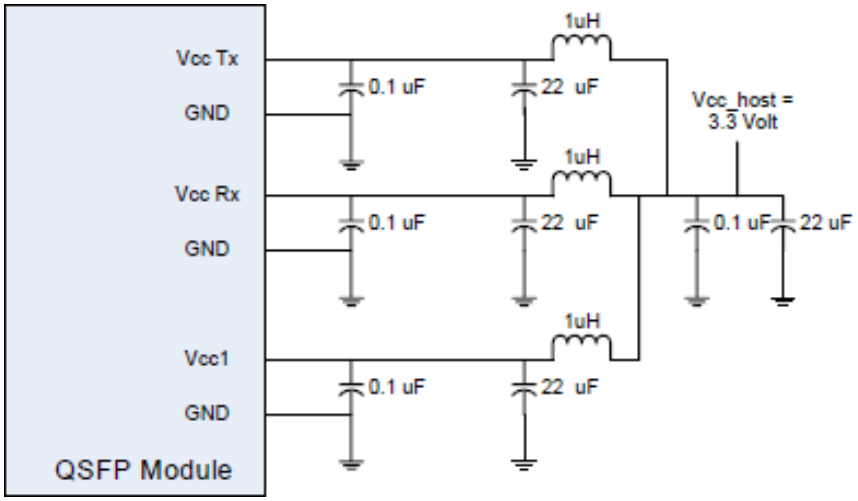

Recommended Application Interface Block Diagram

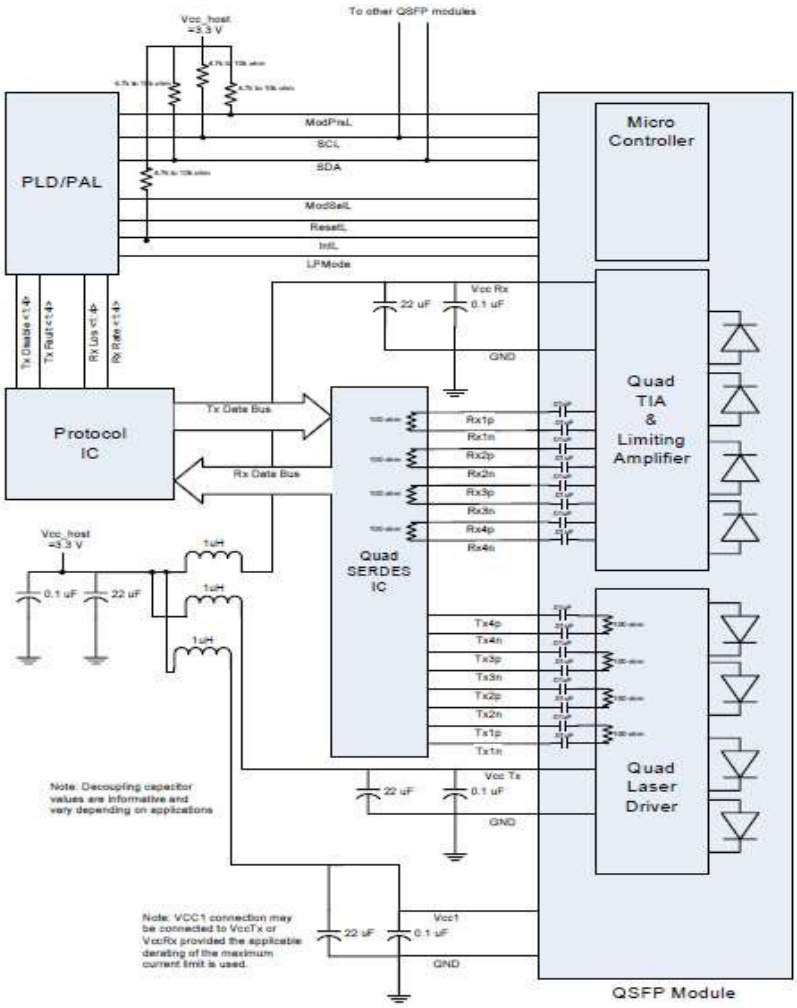

Mechanical Specifications

Measurement unit: mm

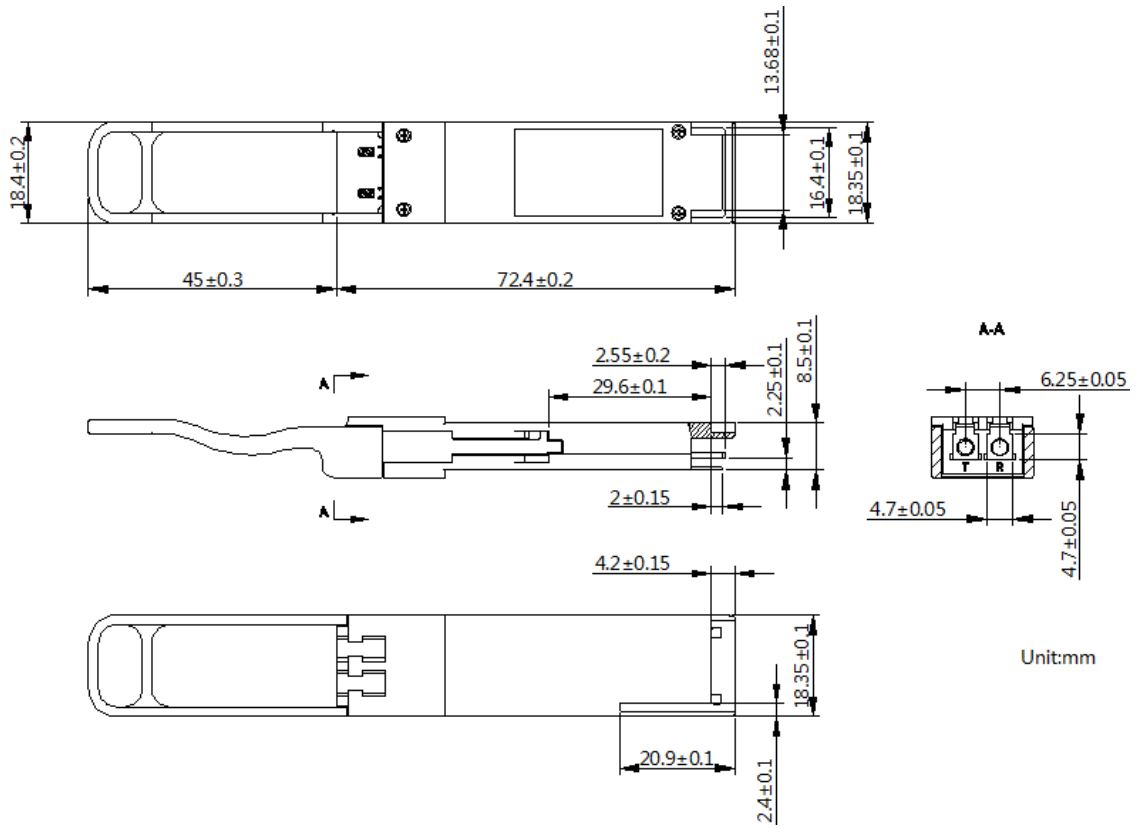

About AddOn Networks

In 1999, AddOn Networks entered the market with a single product. Our founders fulfilled a severe shortage for compatible, cost-effective optical transceivers that compete at the same performance levels as leading OEM manufacturers. Adhering to the idea of redefining service and product quality not previously had in the fiber optic networking industry, AddOn invested resources in solution design, production, fulfillment, and global support.

Combining one of the most extensive and stringent testing processes in the industry, an exceptional free tech support center, and a consistent roll-out of innovative technologies, AddOn has continually set industry standards of quality and reliability throughout its history.

Reliability is the cornerstone of any optical fiber network and is ingrained in AddOn's DNA. It has played a key role in nurturing the long-term relationships developed over the years with customers. AddOn remains committed to exceeding industry standards with certifications ranging from NEBS Level 3 to ISO 9001:2015 with every new development while maintaining the signature reliability of its products.

U.S. Headquarters

Email: sales@addonnetworks.com

Telephone: +1 877.292.1701

Fax: 949.266.9273

Europe Headquarters

Email: salesemea@addonnetworks.com

Telephone: +44 1285 842070