QSFP-100GB-AOC0-5M-AT-AO

ADTRAN® Compatible TAA 100GBase-AOC QSFP28 Active Optical Cable (850nm, MMF, 0.5m)

Features:

- QSFP28 MSA compliant
- Supports 103.1Gbps aggregate bit rate
- Four independent full-duplex channels
- 4x25G electrical interface (OIF CEI-28G-VSR)
- Single 3.3V power supply
- Operating case temperature: 0 to 70 Celsius
- RoHS Compliant and Lead Free
- Maximum power consumption 2.5W each terminal

Applications:

- InfiniBand EDR
- 100GBase Ethernet

Product Description

This is an ADTRAN® compatible 100GBase-AOC QSFP28 to QSFP28 active optical cable that operates over multi-mode fiber with a maximum reach of 50.0cm (1.6ft). At a wavelength of 850nm, it has been programmed, uniquely serialized, and data-traffic and application tested to ensure it is 100% compliant and functional. This active optical cable is TAA (Trade Agreements Act) compliant, and is built to comply with MSA (Multi-Source Agreement) standards. We stand behind the quality of our products and proudly offer a limited lifetime warranty.

AddOn's transceivers are RoHS compliant and lead-free.

TAA refers to the Trade Agreements Act (19 U.S.C. & 2501-2581), which is intended to foster fair and open international trade. TAA requires that the U.S. Government may acquire only "U.S.-made or designated country end products."

TAA COMPLIANT

Rev. 092926

General Specifications

Parameter	Symbol	Min.	Typ.	Max.	Unit
Storage Temperature	Tstg	-40		85	˚C
Operating Case Temperature	Tc	0		70	
Power Supply Voltage	Vcc	-0.5		3.6	V
Relative Humidity (Non-Condensing)	RH	0		85	%

Electrical Characteristics

Parameter	Test Point	Min.	Typ.	Max.	Unit	Notes
Power Consumption				2.5	W	1
Supply Current	Icc			757	mA	1
Power Supply Voltage	Vcc	3.135	3.3	3.465	V	
Data Rate Per Lane			25.78125		Gbps	
Data Rate Accuracy		-100		100	ppm	
Control Input Voltage - High		2		Vcc	V	
Control Input Voltage - Low		0		0.8	V	
Transmitter (Per Lane)						
Overload Differential Voltage	TP1a	900			mV	
Common-Mode Voltage (Vcm)	TP1	-350		2825	mV	2
Differential Termination Resistance Mismatch	TP1			10	%	At 1MHz
Differential Return Loss (SDD11)	TP1			See CEI-28G0VSR Equation 13-19	dB	
Common-Mode to Differential Conversion and Differential to Common-Mode Conversion	TP1			See CEI-28G-VSR Equation 13-20	dB	
Stressed Input Test	TP1a	See CEI-28G-VSR Section 13.3.11.2.1				
Receiver (Per Lane)						
Differential Voltage (Pk-Pk)	TP4			900	mV	
Common-Mode Voltage (Vcm)	TP4	-350		2850	mV	2
Common-Mode Noise (RMS)	TP4			17.5	mV	
Differential Termination Resistance Mismatch	TP4			10	%	At 1MHz

Differential Return Loss (SDD22)	TP4			See CEI-28G-VSR Equation 13-19	dB	
Common-Mode to Differential Conversion and Differential to Common-Mode Conversion (SCC22)	TP4			-2	dB	3
Transition Time (20-80%)	TP4	9.5			ps	
Vertical Eye Closure (VEC)	TP4			5.5	dB	
Eye Width at 10^{-15} Probability (EW15)	TP4	0.57			UI	
Eye Height at 10^{-15} Probability (EH15)	TP4	0.57			UI	

Notes:

1. Per terminal.
2. Vcm is generated by the host. Specification includes the effects of ground offset voltage.
3. From 250MHz to 30GHz.

Pin Descriptions

Pin	Logic	Symbol	Name/Description	Notes
1		GND	Module Ground.	1
2	CML-I	Tx2-	Transmitter Inverted Data Input.	
3	CML-I	Tx2+	Transmitter Non-Inverted Data Input.	
4		GND	Module Ground.	1
5	CML-I	Tx4-	Transmitter Inverted Data Input.	
6	CML-I	Tx4+	Transmitter Non-Inverted Data Input.	
7		GND	Module Ground.	1
8	LVTTL-I	ModSelL	Module Select.	2
9	LVTTL-I	ResetL	Module Reset.	2
10		VccRx	+3.3V Receiver Power Supply.	
11	LVCMOS-I	SCL	2-Wire Serial Interface Clock.	2
12	LVCMOS-I/O	SDA	2-Wire Serial Interface Data.	2
13		GND	Module Ground.	1
14	CML-O	Rx3+	Receiver Non-Inverted Data Output.	
15	CML-O	Rx3-	Receiver Inverted Data Output.	
16		GND	Module Ground.	1
17	CML-O	Rx1+	Receiver Non-Inverted Data Output.	
18	CML-O	Rx1-	Receiver Inverted Data Output.	
19		GND	Module Ground.	1
20		GND	Module Ground.	1

21	CML-O	Rx2-	Receiver Inverted Data Output.	
22	CML-O	Rx2+	Receiver Non-Inverted Data Output.	
23		GND	Module Ground.	1
24	CML-O	Rx4-	Receiver Inverted Data Output.	
25	CML-O	Rx4+	Receiver Non-Inverted Data Output.	
26		GND	Module Ground.	1
27	LVTTL-O	ModPrsL	Module Present. Internally pulled down to the GND.	
28	LVTTL-O	IntL	Interrupt output should be pulled up on the host board.	2
29		VccTx	+3.3V Transmitter Power Supply.	
30		Vcc1	+3.3V Power Supply.	
31	LVTTL-I	LPMode	Low-Power Mode.	2
32		GND	Module Ground.	1
33	CML-I	Tx3+	Transmitter Non-Inverted Data Input.	
34	CML-I	Tx3-	Transmitter Inverted Data Input.	
35		GND	Module Ground.	1
36	CML-I	Tx1+	Transmitter Non-Inverted Data Input.	
37	CML-I	Tx1-	Transmitter Inverted Data Input.	
38		GND	Module Ground.	1

Notes:

1. The module circuit ground is isolated from the module chassis ground within the module.
2. Open collector. Should be pulled up with 4.7kΩ to 10kΩ on the host board to a voltage between 3.15V and 3.6V.

Electrical Pin-Out Details

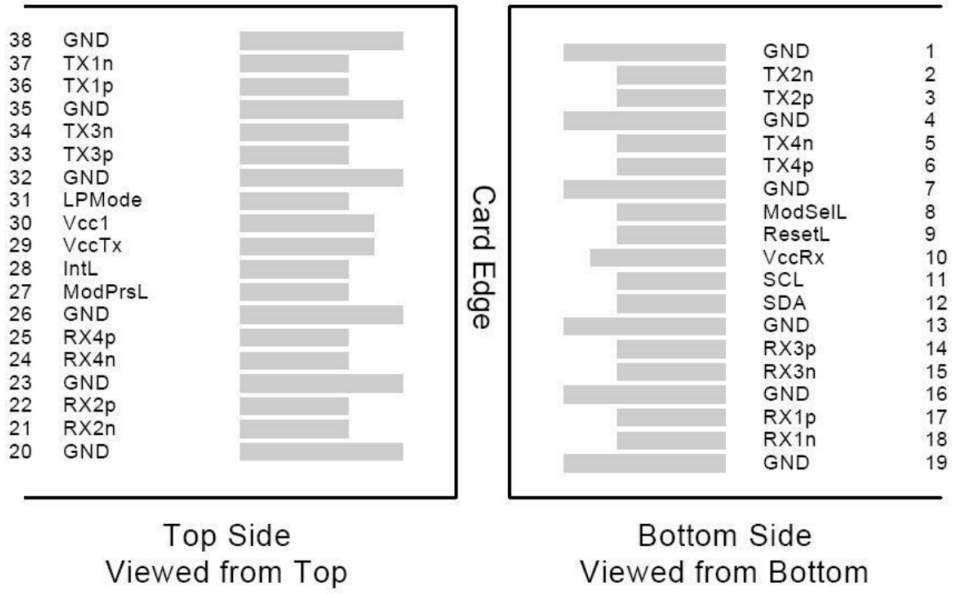

Recommended Power Supply Filter

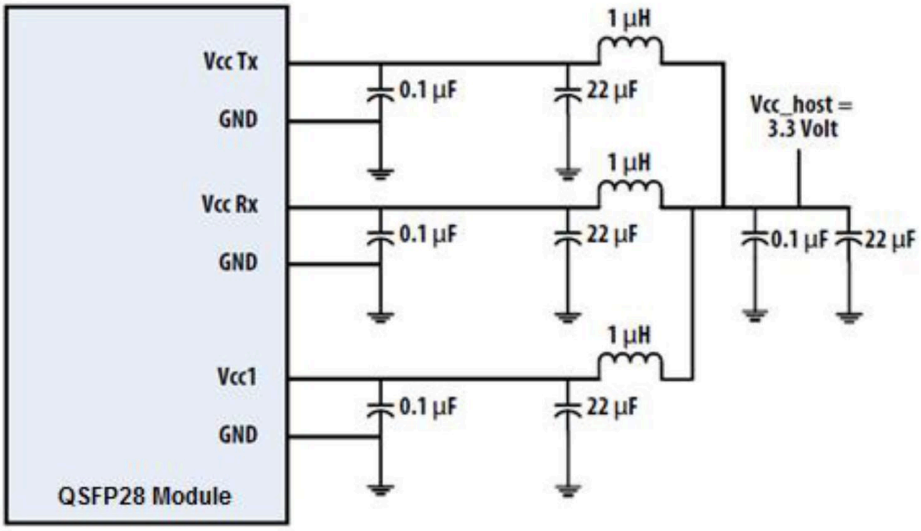

Block Diagram

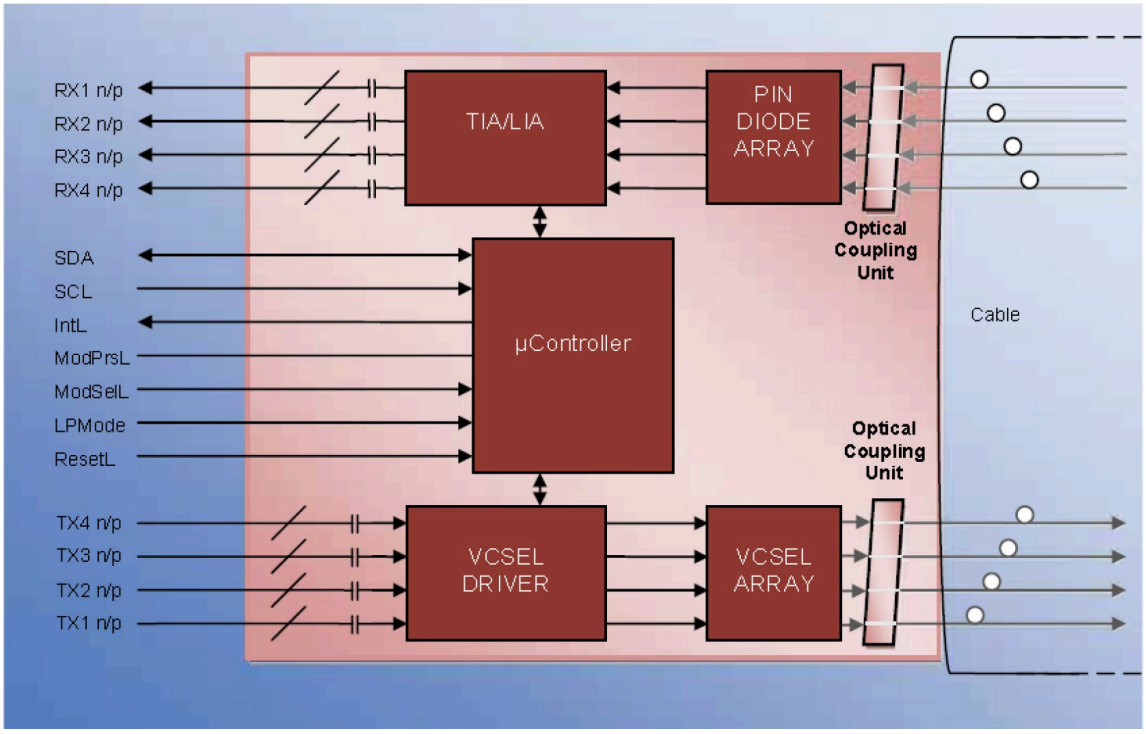

Mechanical Specifications

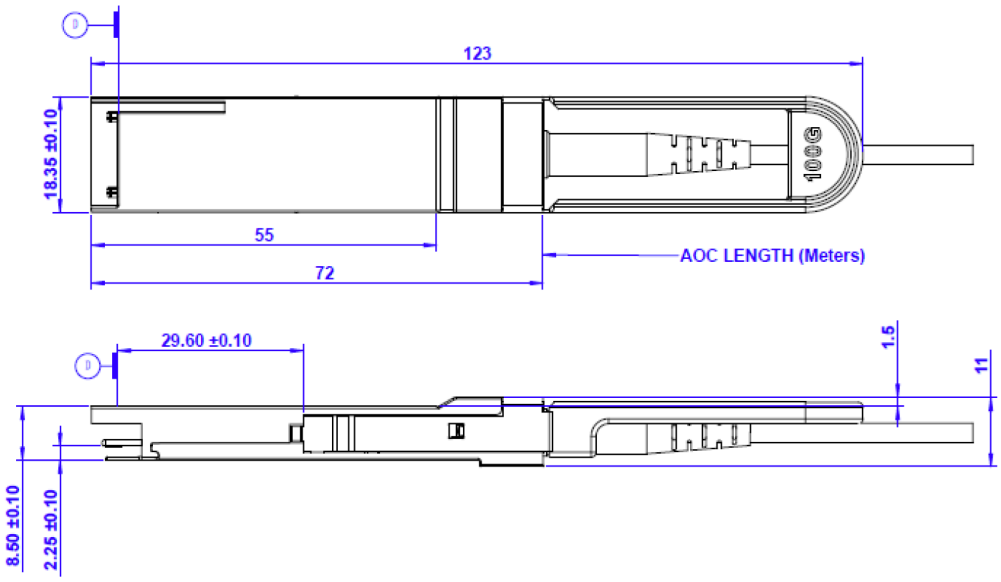

About AddOn Networks

In 1999, AddOn Networks entered the market with a single product. Our founders fulfilled a severe shortage for compatible, cost-effective optical transceivers that compete at the same performance levels as leading OEM manufacturers. Adhering to the idea of redefining service and product quality not previously had in the fiber optic networking industry, AddOn invested resources in solution design, production, fulfillment, and global support.

Combining one of the most extensive and stringent testing processes in the industry, an exceptional free tech support center, and a consistent roll-out of innovative technologies, AddOn has continually set industry standards of quality and reliability throughout its history.

Reliability is the cornerstone of any optical fiber network and is ingrained in AddOn's DNA. It has played a key role in nurturing the long-term relationships developed over the years with customers. AddOn remains committed to exceeding industry standards with certifications ranging from NEBS Level 3 to ISO 9001:2015 with every new development while maintaining the signature reliability of its products.

U.S. Headquarters

Email: sales@addonnetworks.com

Telephone: +1 877.292.1701

Fax: 949.266.9273

Europe Headquarters

Email: salesemea@addonnetworks.com

Telephone: +44 1285 842070