SFP-1000BASE-TSER-PL-C

PacketLight® Compatible TAA 10/100/1000Base-TX SFP Transceiver (Copper, 100m, RJ-45) Serdes

Features:

- Supports 1000BASE-T Operation in Host System
- Fully Metallic Enclosure for Lower EMI
- RJ-45 Connector
- Low Power Dissipation: 1.05W
- Hot-Pluggable
- Operating Temperature: 0 to 70 Celsius
- RoHS Compliant and Lead-Free
- Metal with Lower EMI
- Excellent ESD Protection

Applications:

- 1000Base Copper

Product Description

This PacketLight® compatible SFP transceiver provides 10/100/1000Base-TX throughput up to 100m over a copper connection via a RJ-45 connector. It can operate at temperatures between 0 and 70C. This TX module supports 10/100/1000Base auto-negotiation and can be configured to fit your needs. Our transceiver is built to meet or exceed OEM specifications and is guaranteed to be 100% compatible with PacketLight®. It has been programmed, uniquely serialized, and tested for data-traffic and application to ensure that it will initialize and perform identically. All of our transceivers comply with Multi-Source Agreement (MSA) standards to provide seamless network integration. This transceiver is Trade Agreements Act (TAA) compliant. We stand behind the quality of our products and proudly offer a limited lifetime warranty.

ProLabs' transceivers are RoHS compliant and lead-free.

TAA refers to the Trade Agreements Act (19 U.S.C. & 2501-2581), which is intended to foster fair and open international trade. TAA requires that the U.S. Government may acquire only "U.S.-made or designated country end products.")

Rev. 012026

General Specifications

Parameter	Symbol	Min.	Typ.	Max.	Unit	Notes
Supply Voltage	Vcc	-0.5		4.0	V	
Storage Temperature	Tstg	-40		85	°C	
Operating Temperature	Tc	0		70	°C	
Data Rate	DR		1000		Mbps	
Distance	D			100	m	

Notes:

1. Category 5 UTP. BER<10^{-12}.

Electrical Characteristics

Parameter	Symbol	Min.	Typ.	Max.	Unit	Notes
Power Supply Voltage	Vcc	3.15	3.3	3.45	V	
Supply Voltage	Icc		300	350	mA	
Supply Current	Isurge			30	mA	
Low-Speed Signals						
SFP Output – Low	VOL	0		0.5	V	1
SFP Output – High	VOH	Host_Vcc-0.5		Host_Vcc+0.3	V	1
SFP Input – Low	VIL	0		0.8	V	2
SFP Input – High	VIH	2		Vcc+0.3	V	2
High-Speed Electrical Interface, Transmission Line - SFP						
Line Frequency	fL		125		MHz	3
Tx Output Impedance	ZOUT, Tx		100		Ω	4
Rx Input Impedance	ZIN, Rx		100		Ω	4
High-Speed Electrical Interface, Host - SFP						
Single-Ended Data Input Swing	VIN	250		1200	mV	5
Single-Ended Data Output Swing	VOUT	350		800	mV	5
Rise/Fall Time (20-80%)	Tr/Tf		175		Psec	
Tx Input Impedance	ZIN		50		Ω	5
Rx Output Impedance	ZOUT		50		Ω	5

Notes:

1. 4.7kΩ to 10kΩ pull-up to the Host_Vcc, measured at the host side of the connector.
2. 4.7kΩ to 10kΩ pull-up to the Host_Vcc, measured at the SFP side of the connector.
3. 5-level encoding, per IEEE 802.3.
4. Differential, for all frequencies between 1MHz and 125MHz.
5. Single-ended.

Pin Descriptions

Pin	Symbol	Name/Description	Plug Sequence	Notes
1	VeeT	Transmitter Ground.	1	
2	Tx_Fault	Transmitter Fault Indication.	3	1
3	Tx_Disable	Transmitter Disable.	3	2
4	MOD_DEF2	Module Definition 2.	3	3
5	MOD_DEF1	Module Definition 1.	3	3
6	MOD_DEF0	Module Definition 0.	3	3
7	Rate Select	Not Connected.	3	
8	LOS	Loss of Signal.	3	4
9	VeeR	Receiver Ground.	1	
10	VeeR	Receiver Ground.	1	
11	VeeR	Receiver Ground.	1	
12	RD-	Received Inverse Data Out.	3	
13	RD+	Received Data Out.	3	
14	VeeR	Receiver Ground.	1	
15	VccR	Receiver Power.	2	
16	VccT	Transmitter Power.	2	
17	VeeT	Transmitter Ground.	1	
18	TD+	Transmit Data In.	3	
19	TD-	Transmit Inverse Data In.	3	
20	VeeT	Transmitter Ground.	1	

Notes:

1. Not used.
2. PHY disabled on TDIS>2.0V or open, enabled on TDIS<0.8V, used to reset the module.
3. Should be pulled up with 4.7kΩ to 10kΩ on the host board to a voltage between 2.0V and 3.6V. MOD_DEF0 pulls the line low to indicate that the module is plugged in.
4. 1000M indicator.

Host Board Pin-Out Connectors

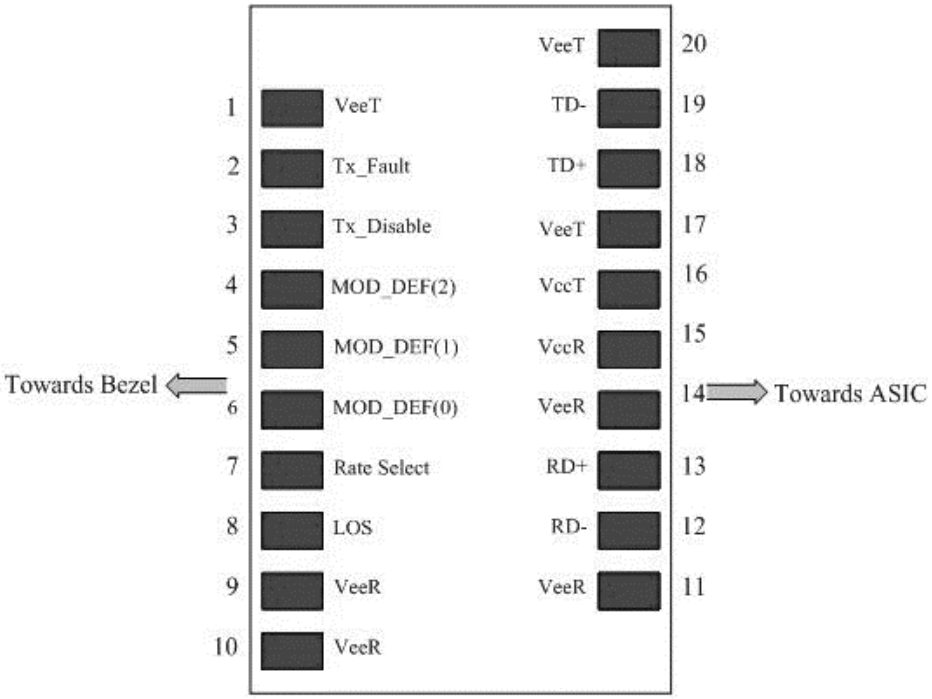

Mechanical Specifications

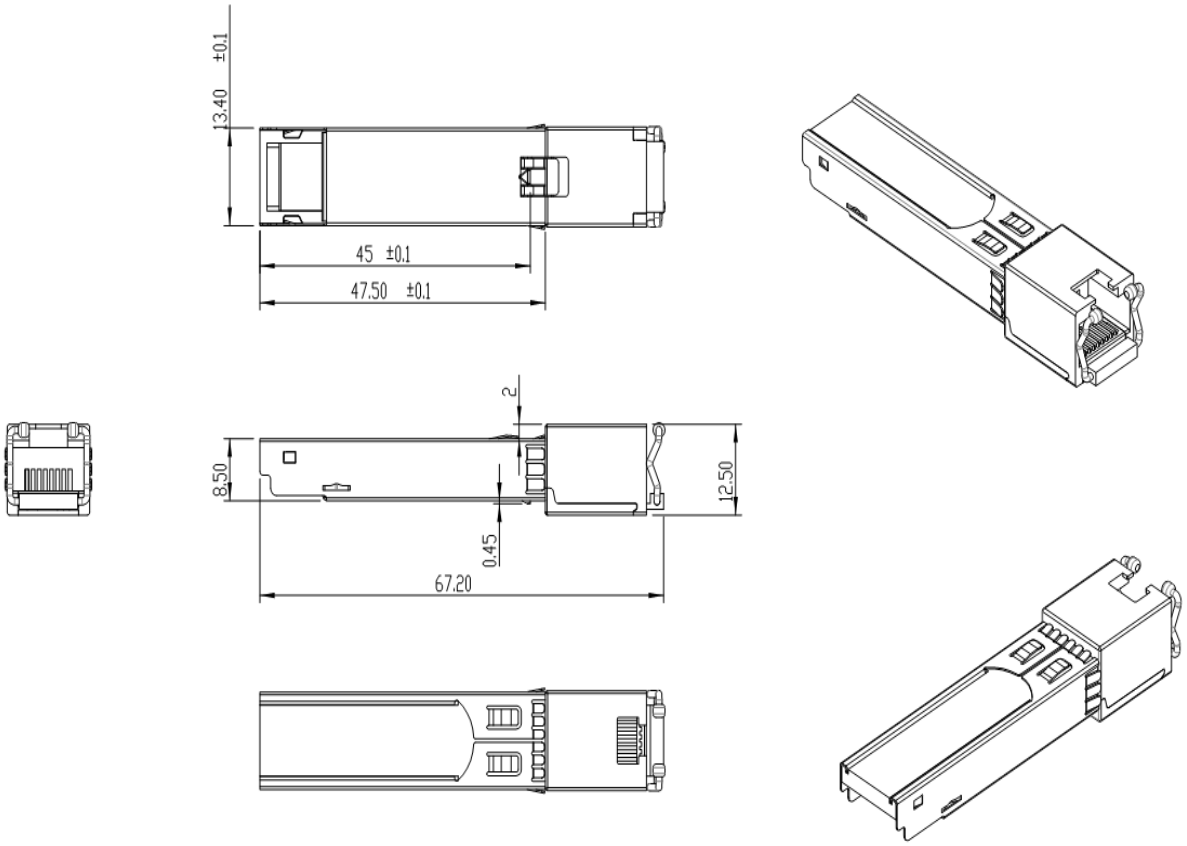

About ProLabs

Our extensive experience comes as standard. For over 20 years ProLabs has delivered optical connectivity solutions that give our customers freedom and choice through our ability to provide seamless interoperability. At the heart of our company is the ability to provide state-of-the-art optical transport and connectivity solutions that are compatible with more than 100 optical switching and transport platforms.

A Complete Portfolio of Network Solutions

ProLabs is focused on innovations in optical transport and connectivity. The combination of our knowledge of optics and networking equipment enables ProLabs to be your single source for optical transport and connectivity solutions from 100Mb to 1.6T while providing innovative solutions that increase network efficiency. We provide the optical connectivity expertise that is compatible with and enhances your switching and transport equipment.

The Trusted Partner

Customer service is our number one value. ProLabs has invested in people, labs and manufacturing capacity to ensure compatible products, and immediate answers to your questions. With Engineering and Manufacturing offices in the U.K. and U.S. augmented by field offices throughout the U.S., U.K. and Asia, ProLabs is able to be our customers best advocate 24 hours a day.

Contact Information

ProLabs US

Email: sales@prolabs.com
Telephone: 952-852-0252

ProLabs UK

Email: salessupport@prolabs.com
Telephone: +44 1285 719 600