XFP-5D-33-AO

Rad® XFP-5D-33 Compatible TAA 10GBase-DWDM XFP Transceiver 100GHz (SMF, 1550.92nm, 40km, LC, DOM)

Features:

- INF-8077i Compliance
- Temperature-stabilized EML transmitter and PIN receiver
- Duplex LC Connector
- Commercial Temperature 0 to 70 Celsius
- Single-mode Fiber
- Hot Pluggable
- Excellent ESD Protection
- Metal with Lower EMI
- RoHS Compliant and Lead Free

Applications:

- 8x/10x Fibre Channel
- 10x Gigabit Ethernet over DWDM
- Access, Metro and Enterprise

Product Description

This Rad® XFP-5D-33 compatible XFP transceiver provides 10GBase-DWDM throughput up to 40km over single-mode fiber (SMF) using a wavelength of 1550.92nm via an LC connector. It can operate at temperatures between 0 and 70C. Our transceiver is built to meet or exceed OEM specifications and is guaranteed to be 100% compatible with Rad®. It has been programmed, uniquely serialized, and tested for data-traffic and application to ensure that it will initialize and perform identically. All of our transceivers comply with Multi-Source Agreement (MSA) standards to provide seamless network integration. Additional product features include Digital Optical Monitoring (DOM) support which allows access to real-time operating parameters. This transceiver is Trade Agreements Act (TAA) compliant. We stand behind the quality of our products and proudly offer a limited lifetime warranty.

AddOn's transceivers are RoHS compliant and lead-free.

TAA refers to the Trade Agreements Act (19 U.S.C. & 2501-2581), which is intended to foster fair and open international trade. TAA requires that the U.S. Government may acquire only "U.S.-made or designated country end products."

Rev. 082526

Regulatory Compliance

- ESD to the Electrical PINs: compatible with MIL-STD-883E Method 3015.4
- ESD to the LC Receptacle: compatible with IEC 61000-4-3
- EMI/EMC compatible with FCC Part 15 Subpart B Rules, EN55022:2010
- Laser Eye Safety compatible with FDA 21CFR, EN60950-1& EN (IEC) 60825-1,2
- RoHS compliant with EU RoHS 2.0 directive 2015/863/EU

Wavelength Guide (100GHz ITU-T Channel)

Channel #	Frequency (THz)	Center Wavelength (nm)
17	191.7	1563.86
18	191.8	1563.05
19	191.9	1562.23
20	192.0	1561.42
21	192.1	1560.61
22	192.2	1559.79
23	192.3	1558.98
24	192.4	1558.17
25	192.5	1557.36
26	192.6	1556.55
27	192.7	1555.75
28	192.8	1554.94
29	192.9	1554.13
30	193.0	1553.33
31	193.1	1552.52
32	193.2	1551.72
33	193.3	1550.92
34	193.4	1550.12
35	193.5	1549.32
36	193.6	1548.51
37	193.7	1547.72
38	193.8	1546.92
39	193.9	1546.12
40	194.0	1545.32
41	194.1	1544.53
42	194.2	1543.73
43	194.3	1542.94
44	194.4	1542.14

45	194.5	1541.35
46	194.6	1540.56
47	194.7	1539.77
48	194.8	1538.98
49	194.9	1538.19
50	195.0	1537.40
51	195.1	1536.61
52	195.2	1535.82
53	195.3	1535.04
54	195.4	1534.25
55	195.5	1533.47
56	195.6	1532.68
57	195.7	1531.90
58	195.8	1531.12
59	195.9	1530.33
60	196.0	1529.55
61	196.1	1528.77

Absolute Maximum Ratings

Parameter	Symbol	Min.	Max.	Unit
Maximum Supply Voltage	Vcc3	-0.5	4.0	V
	Vcc5	-0.5	6.0	V
Storage Temperature	TS	-40	85	°C
Operating Case Temperature	TO	0	70	°C
Relative Humidity	RH	5	95	%
Data Rate		9.95	11.3	Gb/s

Electrical Characteristics

Parameter	Symbol	Min.	Typ.	Max.	Unit	Notes
Power Supply Voltage	Vcc3	3.135	3.3	3.465	V	
	Vcc5	4.75	5.00	5.25	V	
Power Supply Current	Icc3			750	mA	
	Icc5			500		
Power Dissipation	P_D			3500	mW	
Transmitter						
Differential data input swing	Vin,pp	120		1000	mVp-p	
Input differential impedance	Zin		100		Ω	
TX_Disable, P_Down/RST	VIH	2.0		Vcc3+0.3	V	
	VIL	-0.3		0.8	V	
Transmit Disable Assert Time				10	us	
Receiver						
Differential data output swing	Vout, pp	340		850	mVp-p	1
Output differential impedance	Zo		100		Ω	
Data Output Rise Time, Fall Time	tr, tf	24			ps	2
Rx_LOS, Mod-NR, Interrupt	VOH	VccHost-0.5		VccHost+0.3	V	3
	VOL	0		0.4	V	3

Notes:

1. Internally AC coupled, but requires an external 100Ω differential termination.
2. 20-80%.
3. Loss of Signal is an open collector output. Should be pulled up with a 4.7kΩ-10kΩ resistor on the host board.

Optical Characteristics

Parameter	Symbol	Min.	Typ.	Max.	Unit	Notes
Transmitter						
Launch Average Optical Power	Po	-1		+4	dBm	1
Center Wavelength Range	λc	1528.77		1563.86	nm	
Center Wavelength Spacing			100		GHz	
Center Wavelength Tolerance	Δλc	-100		100	pm	
Extinction Ratio	ER	9			dB	2
Spectral Width (-20dB)	Δλ			0.3	nm	
Side Mode Suppression Ratio	SMSR	30			dB	

Average Optical Power (Laser Off)	P_{off}			-30	dBm	1
Eye Diagram	ITU-T G.691 SDH STM-64 L-64.2 compatible					2
Receiver						
Center Wavelength	λ_c	1528		1565	nm	
Receiver Sensitivity @ 9.953Gb/s	S			-24.0	dBm	3
Receiver Sensitivity @ 11.1 Gb/s	S			-15	dBm	4
Receiver overload (P_{avg})	P_{OL}	-1			dBm	3
Path Penalty @1600ps @9.953Gb/s	PP1			2	dB	3
Path Penalty @1600ps @11.1 Gb/s	PP2			3	dB	4
Optical Return Loss	ORL	27			dB	
LOS De-Assert	LOS_D			-27	dBm	
LOS Assert	LOS_A	-38			dBm	
LOS Hysteresis		0.5			dB	

Notes:

1. Measured with worst ER; 1550nm; PRBS 2^{31}-1 test pattern @ 9.953 Gb/s, BER<10^{-12}.
2. Measured with worst ER; 1550nm; PRBS 2^{31}-1 test pattern @ 11.1 Gb/s, BER<10^{-12}.

Pin Descriptions

Pin	Logic	Symbol	Name/Descriptions	Ref.
1		GND	Module Ground	1
2		Vee5	Optional -5.2v Power Supply (not required)	
3	LVTTL-I	MOD_DESEL	Module De-select; When Held low allows the module to respond to 2-wire serial interface.	
4	LVTTL-O	INTERRUPT	Interrupt; Indicates presence of an important condition which can be read via the 2-wire serial interface.	2
5	LVTTL-I	TX_DIS	Transmitter Disable; Turns off transmitter laser output	
6		VCC5	+5V Power Supply	
7		GND	Module Ground	1
8		VCC3	+3.3V Power Supply	
9		VCC3	+3.3V Power Supply	
10	LVTTL-I/O	SCL	2-Wire Serial Interface Clock.	2
11	LVTTL-I/O	SDA	2-Wire Serial Interface Data Line.	2
12	LVTTL-O	MOD_Abs	Indicates Module is not present. Grounded in the Module.	2
13	LVTTL-O	MOD_NR	Module Not Ready; Indicating Module Operational Fault.	2
14	LVTTL-O	RX_LOS	Receiver Loss of Signal Indicator	2
15		GND	Module Ground	1
16		GND	Module Ground	1
17	CML-O	RD-	Receiver Inverted Data Output	
18	CML-O	RD+	Receiver Non-Inverted Data Output.	
19		GND	Module Ground	1
20		VCC2	+1.8V Power Supply (Not required).	
21	LVTTL-I	P_DOWN/RST	Power down; When high, requires the module to limit power consumption to 1.5W or below. 2-Wire serial interface must be functional in the low power mode. Reset; The falling edge initiates a complete reset of the module including the 2-wire serial interface, equivalent to a power cycle.	
22		VCC2	+1.8V Power Supply (Not required)	
23		GND	Module Ground	1
24	PECL-I	REFCLK+	Reference Clock Non-Inverted Input, AC coupled on the host board- not required.	3
25		REFCLK-	Reference Clock Inverted Input, AC coupled on the host board-Not Required	3
26		GND	Module Ground	1
27		GND	Module Ground	1
28	CML-I	TD-	Transmitter Inverted Data Input.	
29	CML-I	TD+	Transmitter Non-Inverted Data Input.	
30		GND	Module Ground	1

Notes:

1. Module ground pins GND are isolated from the module case.
2. Shall be oulled up with 4.7KΩ to 10KΩ to a voltage between 3.15V and 3.45V on the host board.
3. Reference Clock is not required. If present, it will be ignored.

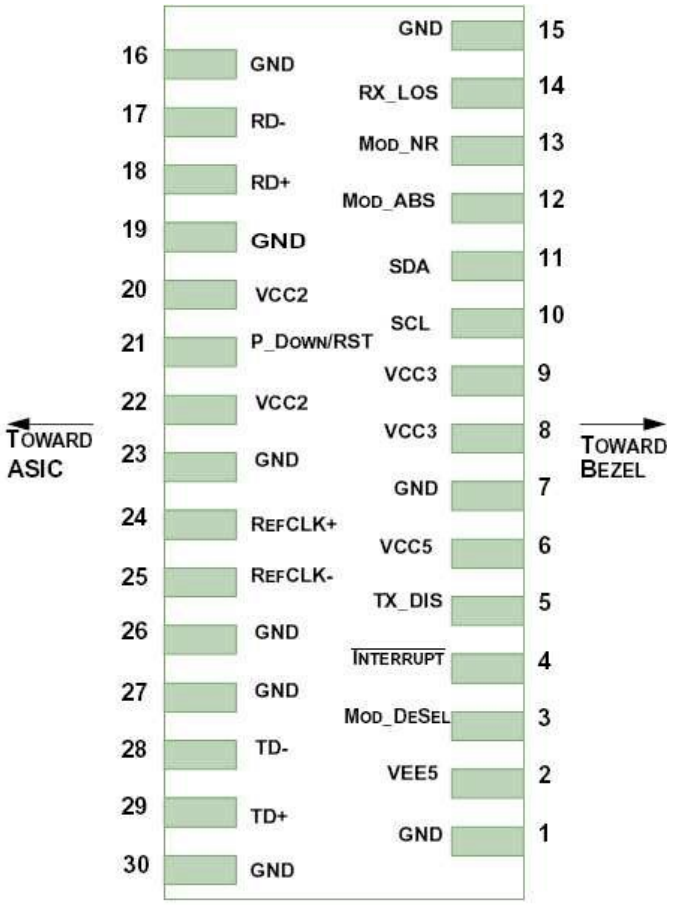

Pin-out of connector Block on Host board

OSNR Characteristics

Bit Rate (Gbps)	Dispersion (ps/nm)	OSNR (dB)	Receiver Sensitivity (dBm)	BER
9.95/10.3	0	>30	-24 ~-7	10E-12
		>25	-18 ~-7	
	1200	>30	-23 ~-7	
		>27	-18 ~ -7	
	1600	>30	-22 ~-7	
		>28	-18 ~-7	
10.7/11.1 with FEC	0	>30	-26 ~-7	10E-4
		>16	-18 ~-7	
	1200	>30	-25 ~-7	
		>18	-18 ~-7	
	1600	>30	-22 ~-7	
		>20	-18 ~-7	

Recommended Application Interface Block Diagram

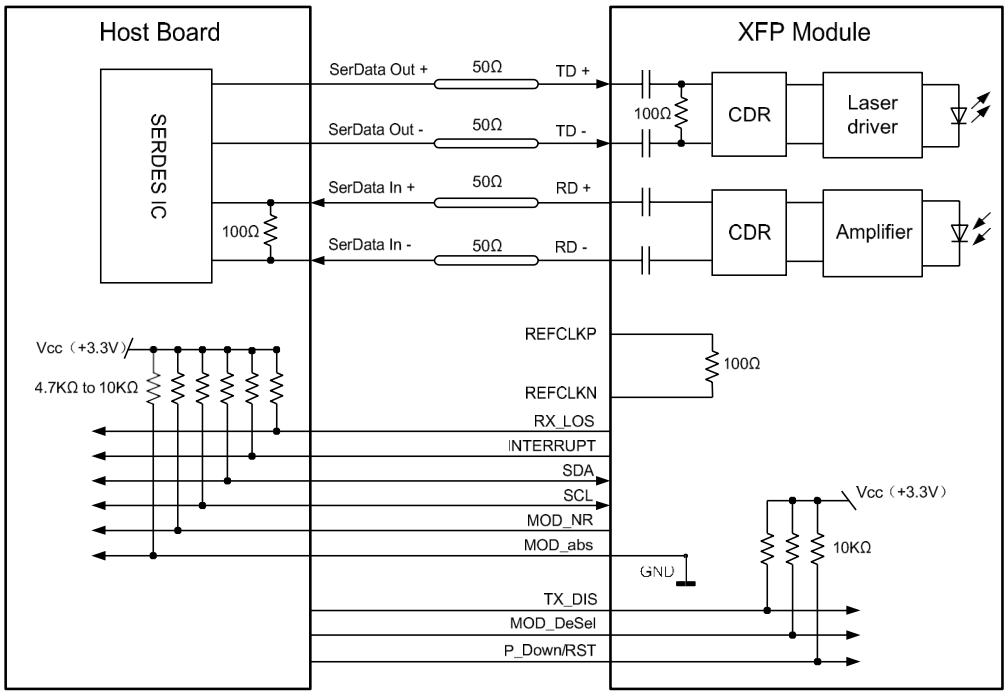

Recommended Host Board Power Supply Filter Network

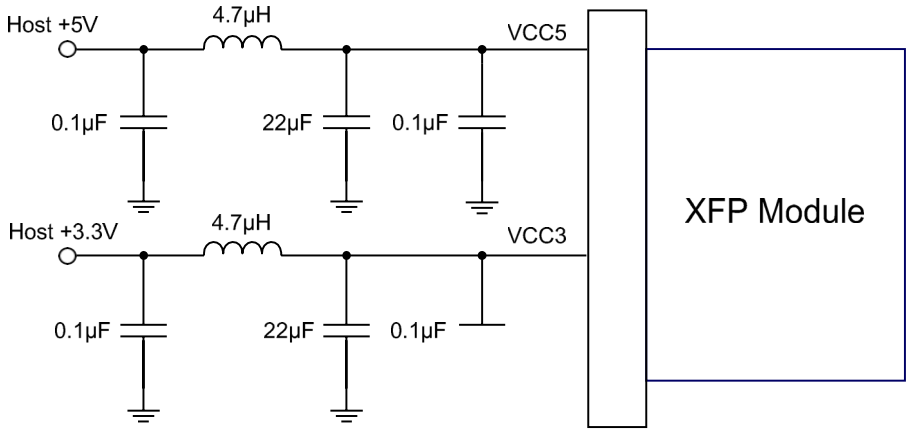

Management Interface

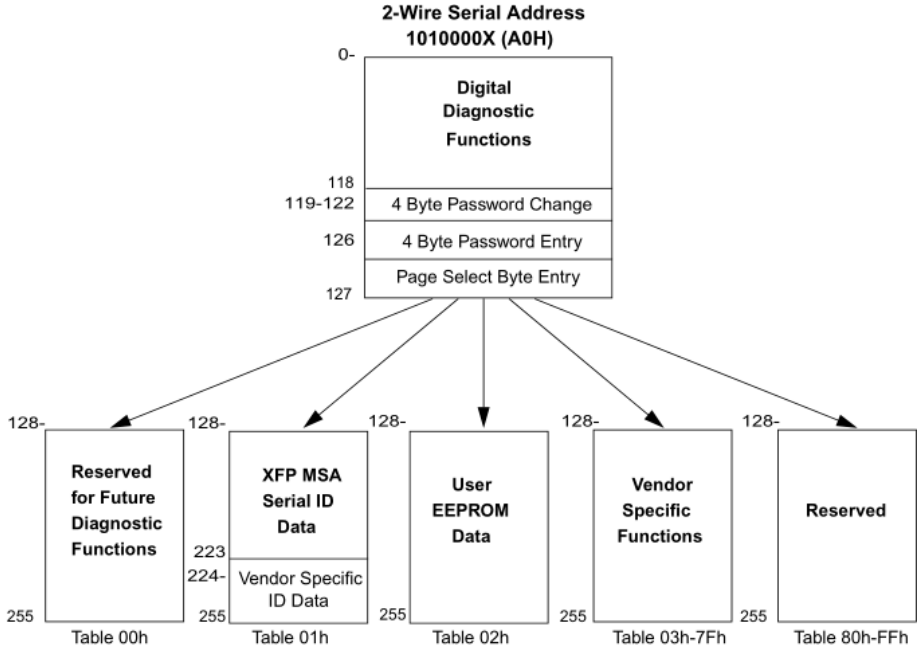

Mechanical Specifications

Small Form Factor Pluggable (XFP) transceivers are compatible with the dimensions defined by the XFP Multi-Sourcing Agreement (MSA).

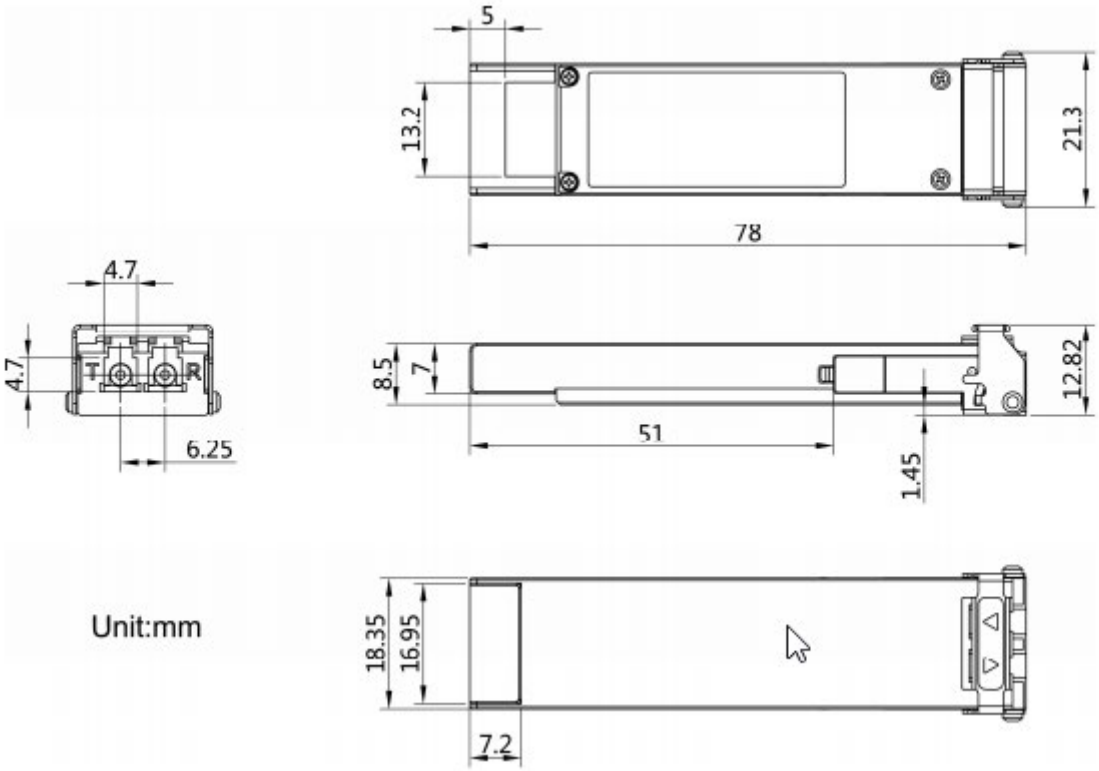

About AddOn Networks

In 1999, AddOn Networks entered the market with a single product. Our founders fulfilled a severe shortage for compatible, cost-effective optical transceivers that compete at the same performance levels as leading OEM manufacturers. Adhering to the idea of redefining service and product quality not previously had in the fiber optic networking industry, AddOn invested resources in solution design, production, fulfillment, and global support.

Combining one of the most extensive and stringent testing processes in the industry, an exceptional free tech support center, and a consistent roll-out of innovative technologies, AddOn has continually set industry standards of quality and reliability throughout its history.

Reliability is the cornerstone of any optical fiber network and is ingrained in AddOn's DNA. It has played a key role in nurturing the long-term relationships developed over the years with customers. AddOn remains committed to exceeding industry standards with certifications ranging from NEBS Level 3 to ISO 9001:2015 with every new development while maintaining the signature reliability of its products.

U.S. Headquarters

Email: sales@addonnetworks.com

Telephone: +1 877.292.1701

Fax: 949.266.9273

Europe Headquarters

Email: salesemea@addonnetworks.com

Telephone: +44 1285 842070