**XFP-5D-49-AO**

Rad® XFP-5D-49 Compatible TAA 10GBase-DWDM XFP Transceiver 100GHz (SMF, 1538.19nm, 40km, LC, DOM)

**Features:**

- INF-8077i Compliance
- Temperature-stabilized EML transmitter and PIN receiver
- Duplex LC Connector
- Commercial Temperature 0 to 70 Celsius
- Single-mode Fiber
- Hot Pluggable
- Excellent ESD Protection
- Metal with Lower EMI
- RoHS Compliant and Lead Free

**Applications:**

- 8x/10x Fibre Channel
- 10x Gigabit Ethernet over DWDM
- Access, Metro and Enterprise

**Product Description**

This Rad® XFP-5D-49 compatible XFP transceiver provides 10GBase-DWDM throughput up to 40km over single-mode fiber (SMF) using a wavelength of 1538.19nm via an LC connector. It can operate at temperatures between 0 and 70C. Our transceiver is built to meet or exceed OEM specifications and is guaranteed to be 100% compatible with Rad®. It has been programmed, uniquely serialized, and tested for data-traffic and application to ensure that it will initialize and perform identically. All of our transceivers comply with Multi-Source Agreement (MSA) standards to provide seamless network integration. Additional product features include Digital Optical Monitoring (DOM) support which allows access to real-time operating parameters. This transceiver is Trade Agreements Act (TAA) compliant. We stand behind the quality of our products and proudly offer a limited lifetime warranty.

AddOn's transceivers are RoHS compliant and lead-free.

TAA refers to the Trade Agreements Act (19 U.S.C. & 2501-2581), which is intended to foster fair and open international trade. TAA requires that the U.S. Government may acquire only "U.S.-made or designated country end products."

**Rev. 082526**

**Regulatory Compliance**

- ESD to the Electrical PINs: compatible with MIL-STD-883E Method 3015.4
- ESD to the LC Receptacle: compatible with IEC 61000-4-3
- EMI/EMC compatible with FCC Part 15 Subpart B Rules, EN55022:2010
- Laser Eye Safety compatible with FDA 21CFR, EN60950-1& EN (IEC) 60825-1,2
- RoHS compliant with EU RoHS 2.0 directive 2015/863/EU

**Wavelength Guide (100GHz ITU-T Channel)**

| Channel # | Frequency (THz) | Center Wavelength (nm) |
|---|---|---|
| 17 | 191.7 | 1563.86 |
| 18 | 191.8 | 1563.05 |
| 19 | 191.9 | 1562.23 |
| 20 | 192.0 | 1561.42 |
| 21 | 192.1 | 1560.61 |
| 22 | 192.2 | 1559.79 |
| 23 | 192.3 | 1558.98 |
| 24 | 192.4 | 1558.17 |
| 25 | 192.5 | 1557.36 |
| 26 | 192.6 | 1556.55 |
| 27 | 192.7 | 1555.75 |
| 28 | 192.8 | 1554.94 |
| 29 | 192.9 | 1554.13 |
| 30 | 193.0 | 1553.33 |
| 31 | 193.1 | 1552.52 |
| 32 | 193.2 | 1551.72 |
| 33 | 193.3 | 1550.92 |
| 34 | 193.4 | 1550.12 |
| 35 | 193.5 | 1549.32 |
| 36 | 193.6 | 1548.51 |
| 37 | 193.7 | 1547.72 |
| 38 | 193.8 | 1546.92 |
| 39 | 193.9 | 1546.12 |
| 40 | 194.0 | 1545.32 |
| 41 | 194.1 | 1544.53 |
| 42 | 194.2 | 1543.73 |
| 43 | 194.3 | 1542.94 |
| 44 | 194.4 | 1542.14 |

| | | |
|---|---|---|
| 45 | 194.5 | 1541.35 |
| 46 | 194.6 | 1540.56 |
| 47 | 194.7 | 1539.77 |
| 48 | 194.8 | 1538.98 |
| 49 | 194.9 | 1538.19 |
| 50 | 195.0 | 1537.40 |
| 51 | 195.1 | 1536.61 |
| 52 | 195.2 | 1535.82 |
| 53 | 195.3 | 1535.04 |
| 54 | 195.4 | 1534.25 |
| 55 | 195.5 | 1533.47 |
| 56 | 195.6 | 1532.68 |
| 57 | 195.7 | 1531.90 |
| 58 | 195.8 | 1531.12 |
| 59 | 195.9 | 1530.33 |
| 60 | 196.0 | 1529.55 |
| 61 | 196.1 | 1528.77 |

## Absolute Maximum Ratings

| Parameter | Symbol | Min. | Max. | Unit |
|---|---|---|---|---|
| **Maximum Supply Voltage** | Vcc3 | -0.5 | 4.0 | V |
| | Vcc5 | -0.5 | 6.0 | V |
| **Storage Temperature** | TS | -40 | 85 | °C |
| **Operating Case Temperature** | TO | 0 | 70 | °C |
| **Relative Humidity** | RH | 5 | 95 | % |
| **Data Rate** | | 9.95 | 11.3 | Gb/s |

## Electrical Characteristics

| Parameter | Symbol | Min. | Typ. | Max. | Unit | Notes |
|---|---|---|---|---|---|---|
| **Power Supply Voltage** | Vcc3 | 3.135 | 3.3 | 3.465 | V | |
| | Vcc5 | 4.75 | 5.00 | 5.25 | V | |
| **Power Supply Current** | Icc3 | | | 750 | mA | |
| | Icc5 | | | 500 | | |
| **Power Dissipation** | $P_D$ | | | 3500 | mW | |
| **Transmitter** | | | | | | |
| **Differential data input swing** | Vin,pp | 120 | | 1000 | mVp-p | |
| **Input differential impedance** | Zin | | 100 | | Ω | |
| **TX_Disable, P_Down/RST** | VIH | 2.0 | | Vcc3+0.3 | V | |
| | VIL | -0.3 | | 0.8 | V | |
| **Transmit Disable Assert Time** | | | | 10 | us | |
| **Receiver** | | | | | | |
| **Differential data output swing** | Vout, pp | 340 | | 850 | mVp-p | 1 |
| **Output differential impedance** | Zo | | 100 | | Ω | |
| **Data Output Rise Time, Fall Time** | tr, tf | 24 | | | ps | 2 |
| **Rx_LOS, Mod-NR, Interrupt** | VOH | VccHost-0.5 | | VccHost+0.3 | V | 3 |
| | VOL | 0 | | 0.4 | V | 3 |

Notes:

1. Internally AC coupled, but requires an external 100Ω differential termination.
2. 20-80%.
3. Loss of Signal is an open collector output. Should be pulled up with a 4.7kΩ-10kΩ resistor on the host board.

## Optical Characteristics

| Parameter | Symbol | Min. | Typ. | Max. | Unit | Notes |
|---|---|---|---|---|---|---|
| **Transmitter** | | | | | | |
| **Launch Average Optical Power** | Po | -1 | | +4 | dBm | 1 |
| **Center Wavelength Range** | λc | 1528.77 | | 1563.86 | nm | |
| **Center Wavelength Spacing** | | | 100 | | GHz | |
| **Center Wavelength Tolerance** | Δλc | -100 | | 100 | pm | |
| **Extinction Ratio** | ER | 9 | | | dB | 2 |
| **Spectral Width (-20dB)** | Δλ | | | 0.3 | nm | |
| **Side Mode Suppression Ratio** | SMSR | 30 | | | dB | |

| | | | | | | |
|---|---|---|---|---|---|---|
| **Average Optical Power (Laser Off)** | $P_{off}$ | | | -30 | dBm | 1 |
| **Eye Diagram** | ITU-T G.691 SDH STM-64 L-64.2 compatible | | | | | 2 |
| **Receiver** | | | | | | |
| **Center Wavelength** | $\lambda_c$ | 1528 | | 1565 | nm | |
| **Receiver Sensitivity @ 9.953Gb/s** | S | | | -24.0 | dBm | 3 |
| **Receiver Sensitivity @ 11.1 Gb/s** | S | | | -15 | dBm | 4 |
| **Receiver overload ($P_{avg}$)** | $P_{OL}$ | -1 | | | dBm | 3 |
| **Path Penalty @1600ps @9.953Gb/s** | PP1 | | | 2 | dB | 3 |
| **Path Penalty @1600ps @11.1 Gb/s** | PP2 | | | 3 | dB | 4 |
| **Optical Return Loss** | ORL | 27 | | | dB | |
| **LOS De-Assert** | $LOS_D$ | | | -27 | dBm | |
| **LOS Assert** | $LOS_A$ | -38 | | | dBm | |
| **LOS Hysteresis** | | 0.5 | | | dB | |

**Notes:**

1. Measured with worst ER; 1550nm; PRBS $2^{31}$-1 test pattern @ 9.953 Gb/s, BER<$10^{-12}$.
2. Measured with worst ER; 1550nm; PRBS $2^{31}$-1 test pattern @ 11.1 Gb/s, BER<$10^{-12}$.

**Pin Descriptions**

| Pin | Logic | Symbol | Name/Descriptions | Ref. |
|---|---|---|---|---|
| **1** | | GND | Module Ground | 1 |
| **2** | | Vee5 | Optional -5.2v Power Supply (not required) | |
| **3** | LVTTL-I | MOD_DESEL | Module De-select; When Held low allows the module to respond to 2-wire serial interface. | |
| **4** | LVTTL-O | INTERRUPT | Interrupt; Indicates presence of an important condition which can be read via the 2-wire serial interface. | 2 |
| **5** | LVTTL-I | TX_DIS | Transmitter Disable; Turns off transmitter laser output | |
| **6** | | VCC5 | +5V Power Supply | |
| **7** | | GND | Module Ground | 1 |
| **8** | | VCC3 | +3.3V Power Supply | |
| **9** | | VCC3 | +3.3V Power Supply | |
| **10** | LVTTL-I/O | SCL | 2-Wire Serial Interface Clock. | 2 |
| **11** | LVTTL-I/O | SDA | 2-Wire Serial Interface Data Line. | 2 |
| **12** | LVTTL-O | MOD_Abs | Indicates Module is not present. Grounded in the Module. | 2 |
| **13** | LVTTL-O | MOD_NR | Module Not Ready; Indicating Module Operational Fault. | 2 |
| **14** | LVTTL-O | RX_LOS | Receiver Loss of Signal Indicator | 2 |
| **15** | | GND | Module Ground | 1 |
| **16** | | GND | Module Ground | 1 |
| **17** | CML-O | RD- | Receiver Inverted Data Output | |
| **18** | CML-O | RD+ | Receiver Non-Inverted Data Output. | |
| **19** | | GND | Module Ground | 1 |
| **20** | | VCC2 | +1.8V Power Supply (Not required). | |
| **21** | LVTTL-I | P_DOWN/RST | Power down; When high, requires the module to limit power consumption to 1.5W or below. 2-Wire serial interface must be functional in the low power mode.<br>Reset; The falling edge initiates a complete reset of the module including the 2-wire serial interface, equivalent to a power cycle. | |
| **22** | | VCC2 | +1.8V Power Supply (Not required) | |
| **23** | | GND | Module Ground | 1 |
| **24** | PECL-I | REFCLK+ | Reference Clock Non-Inverted Input, AC coupled on the host board- not required. | 3 |
| **25** | | REFCLK- | Reference Clock Inverted Input, AC coupled on the host board-Not Required | 3 |
| **26** | | GND | Module Ground | 1 |
| **27** | | GND | Module Ground | 1 |
| **28** | CML-I | TD- | Transmitter Inverted Data Input. | |
| **29** | CML-I | TD+ | Transmitter Non-Inverted Data Input. | |
| **30** | | GND | Module Ground | 1 |

**Notes:**

1. Module ground pins GND are isolated from the module case.
2. Shall be oulled up with 4.7KΩ to 10KΩ to a voltage between 3.15V and 3.45V on the host board.
3. Reference Clock is not required. If present, it will be ignored.

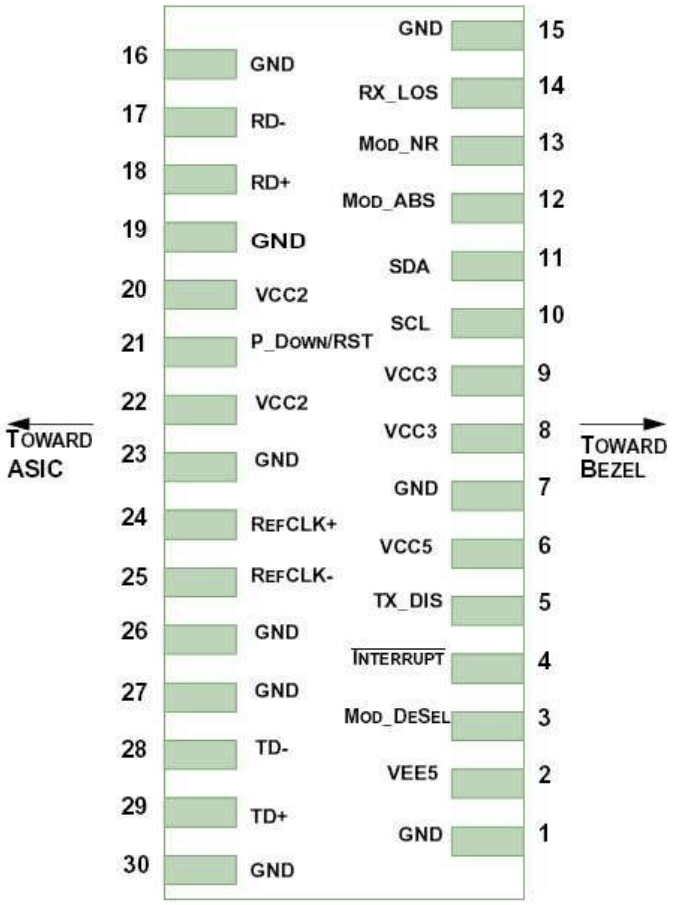


Pin-out of connector Block on Host board

## OSNR Characteristics

| Bit Rate (Gbps) | Dispersion (ps/nm) | OSNR (dB) | Receiver Sensitivity (dBm) | BER |
|---|---|---|---|---|
| **9.95/10.3** | 0 | >30 | -24 ~-7 | 10E-12 |
| | | >25 | -18 ~-7 | |
| | 1200 | >30 | -23 ~-7 | |
| | | >27 | -18 ~ -7 | |
| | 1600 | >30 | -22 ~-7 | |
| | | >28 | -18 ~-7 | |
| **10.7/11.1 with FEC** | 0 | >30 | -26 ~-7 | 10E-4 |
| | | >16 | -18 ~-7 | |
| | 1200 | >30 | -25 ~-7 | |
| | | >18 | -18 ~-7 | |
| | 1600 | >30 | -22 ~-7 | |
| | | >20 | -18 ~-7 | |

## Recommended Application Interface Block Diagram

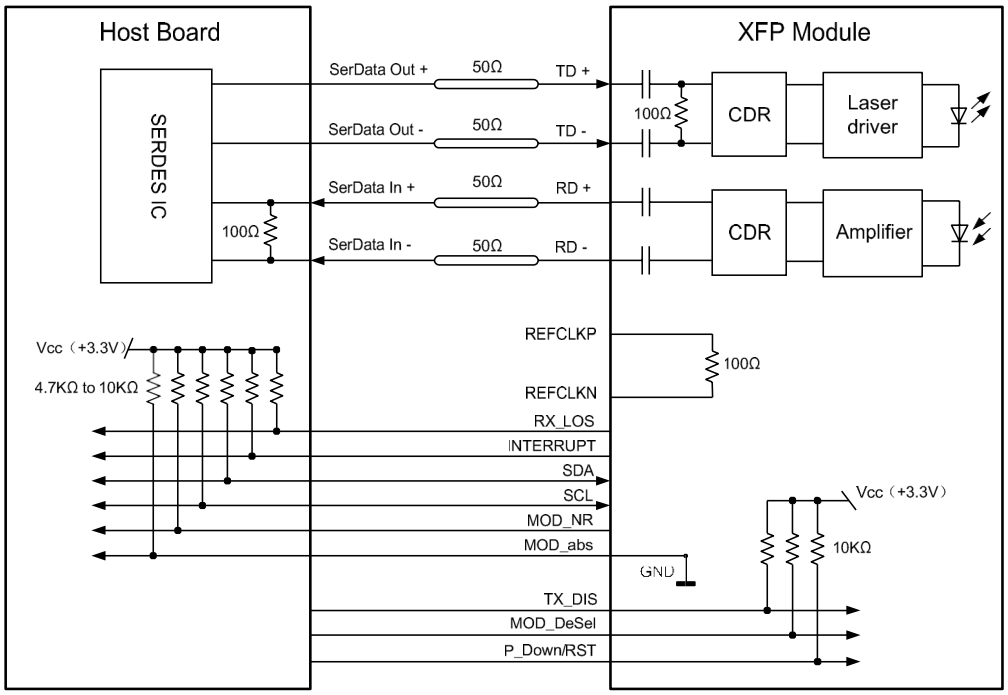

## Recommended Host Board Power Supply Filter Network

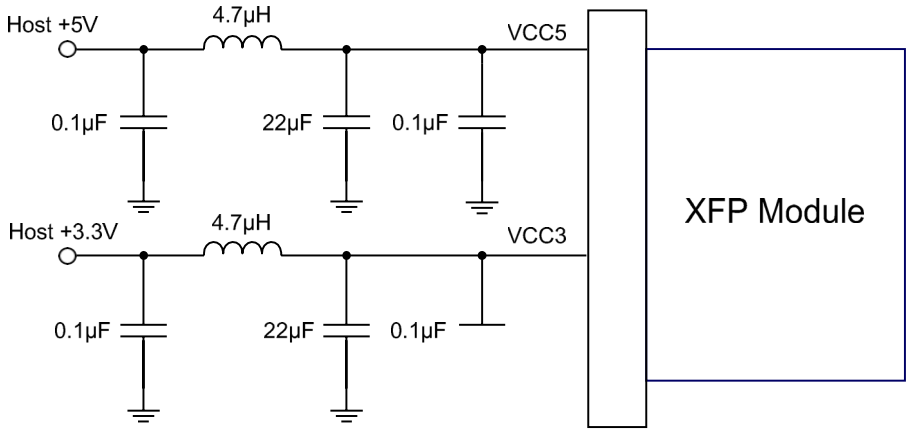


## Management Interface

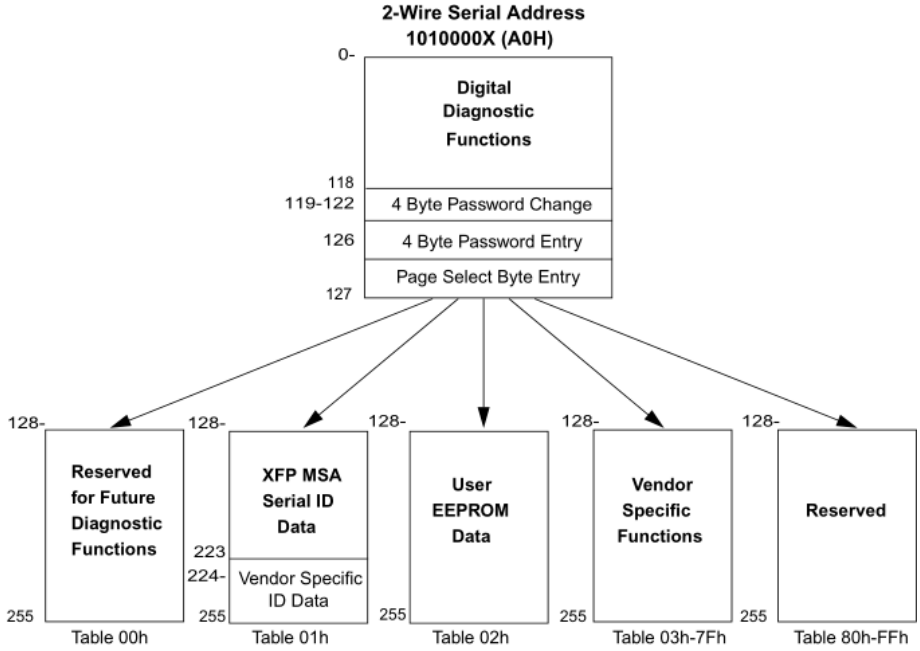

**Mechanical Specifications**

Small Form Factor Pluggable (XFP) transceivers are compatible with the dimensions defined by the XFP Multi-Sourcing Agreement (MSA).

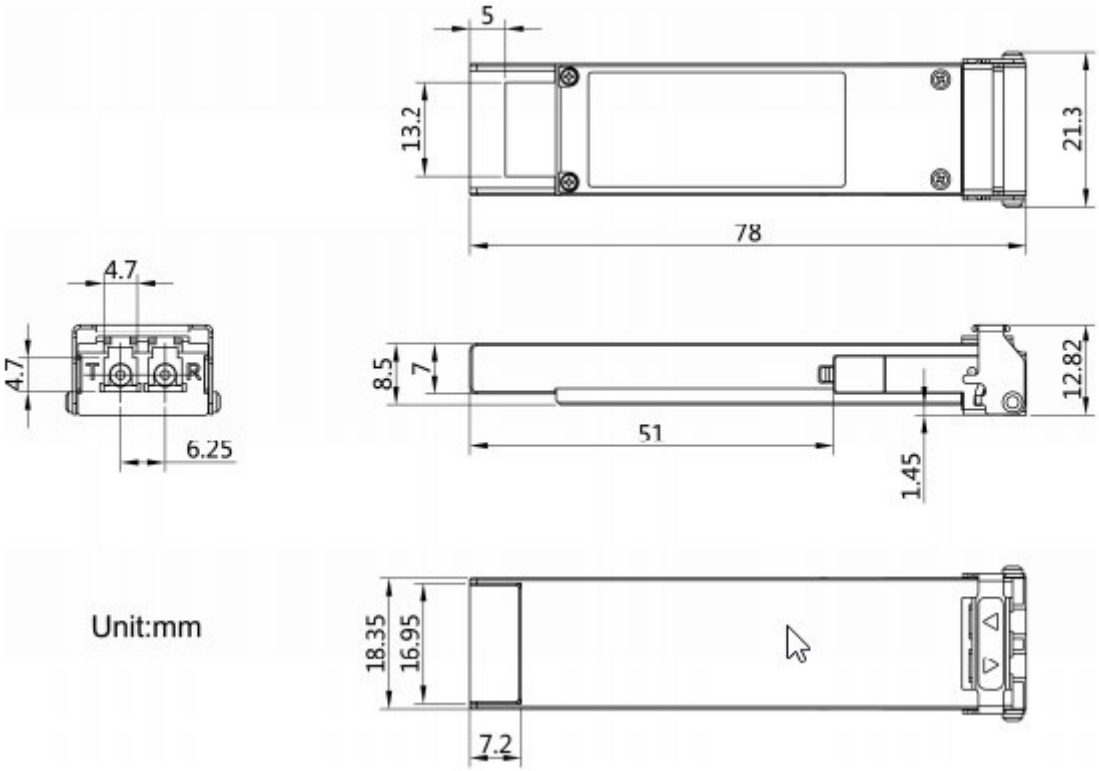

**About AddOn Networks**

In 1999, AddOn Networks entered the market with a single product. Our founders fulfilled a severe shortage for compatible, cost-effective optical transceivers that compete at the same performance levels as leading OEM manufacturers. Adhering to the idea of redefining service and product quality not previously had in the fiber optic networking industry, AddOn invested resources in solution design, production, fulfillment, and global support.

Combining one of the most extensive and stringent testing processes in the industry, an exceptional free tech support center, and a consistent roll-out of innovative technologies, AddOn has continually set industry standards of quality and reliability throughout its history.

Reliability is the cornerstone of any optical fiber network and is ingrained in AddOn's DNA. It has played a key role in nurturing the long-term relationships developed over the years with customers. AddOn remains committed to exceeding industry standards with certifications ranging from NEBS Level 3 to ISO 9001:2015 with every new development while maintaining the signature reliability of its products.


**U.S. Headquarters**

Email: sales@addonnetworks.com

Telephone: +1 877.292.1701

Fax: 949.266.9273

**Europe Headquarters**

Email: salesemea@addonnetworks.com

Telephone: +44 1285 842070