SFP-1GB-CW-35-80-N-AO

Alcatel-Lucent Nokia® Compatible TAA 1000Base-CWDM SFP Transceiver (SMF, 1350nm, 80km, LC)

Features:

- INF-8074 and SFF-8472 Compliance
- Duplex LC Connector
- Commercial Temperature 0 to 70 Celsius
- Single-mode Fiber
- Hot Pluggable
- Excellent ESD Protection
- Metal with Lower EMI
- RoHS Compliant and Lead Free



Applications:

- Ethernet over CWDM
- Access, Metro and Enterprise

Product Description

This Alcatel-Lucent Nokia® compatible SFP transceiver provides 2GBase-CWDM Fibre Channel throughput up to 80km over single-mode fiber (SMF) using a wavelength of 1350nm via an LC connector. It is guaranteed to be 100% compatible with the equivalent Alcatel-Lucent Nokia® transceiver. This easy to install, hot swappable transceiver has been programmed, uniquely serialized and data-traffic and application tested to ensure that it will initialize and perform identically. It is built to meet or exceed the specifications of Alcatel-Lucent Nokia®, as well as to comply with MSA (Multi-Source Agreement) standards to ensure seamless network integration. This transceiver is Trade Agreements Act (TAA) compliant. We stand behind the quality of our products and proudly offer a limited lifetime warranty.

AddOn's transceivers are RoHS compliant and lead-free.

TAA refers to the Trade Agreements Act (19 U.S.C. & 2501-2581), which is intended to foster fair and open international trade. TAA requires that the U.S. Government may acquire only "U.S.-made or designated country end products."

TAA COMPLIANT

CWDM Available Wavelengths

Wavelengths	Min.	Typ.	Max.
27	1264.5	1271	1277.5
29	1284.5	1291	1297.5
31	1304.5	1311	1317.5
33	1324.5	1331	1337.5
35	1344.5	1351	1357.5
37	1364.5	1371	1377.5
39	1384.5	1391	1397.5
41	1404.5	1411	1417.5
43	1424.5	1431	1437.5
45	1444.5	1451	1457.5
47	1464.5	1471	1477.5
49	1484.5	1491	1497.5
51	1504.5	1511	1517.5
53	1524.5	1531	1537.5
55	1544.5	1551	1557.5
57	1564.5	1571	1577.5
59	1584.5	1591	1597.5
61	1604.5	1611	1617.5

Absolute Maximum Ratings

Parameter	Symbol	Min.	Max.	Unit
Maximum Supply Voltage	Vcc	-0.5	4.0	V
Storage Temperature	TS	-40	85	°C
Operating Case Temperature	Tc	0	70	°C
Operating Humidity	RH	5	85	%
Receiver Power	R_{MAX}		-3	dBm
Maximum Bitrate	B_{max}		1.25	Gbps

Electrical Characteristics (TOP=25°C, Vcc=3.3Volts)

Parameter	Symbol	Min.	Typ.	Max.	Unit	Notes
Power Supply Voltage	Vcc	3.15	3.30	3.43	V	
Power Supply Current	Icc			303	mA	
Power Consumption	P_{DISS}			1	W	
Transmitter						
Differential data input swing	Vin,pp	120		850	mV	
Input differential impedance	Zin	80	100	120	Ω	
Receiver						
Differential data output swing	Vout, pp	300		850	mV	
Output differential impedance	Zin	80	100	120	Ω	

Optical Characteristics

Parameter	Symbol	Min.	Typ.	Max.	Unit	Notes
Transmitter						
Optical Power (average)	P_{AVE}	0		5	dBm	1
Optical Extinction Ratio	ER	9			dB	
Optical Wavelength	Tλ	x-6	x	x+7.5	nm	
Insertion loss	IL		0.7			
Receiver						
Receiver Sensitivity (average)	R_{AVE}			-24	dBm	2
Receiver overload	P_{max}	-3			dBm	3
Receiver wavelength	Rλ	1260		1620	nm	

Notes:

1. Coupled into a Single-mode fibre
2. Average power, back-to-back, @1.25Gbps, BER 1E-12, PRBS 231-1.
3. Exceeding the Receiver overload can physically damage the module. Please use appropriate attenuation.

Pin Descriptions

Pin	Symbol	Name/Descriptions	Ref.
1	VeeT	Transmitter Ground (Common with Receiver Ground).	1
2	TX Fault	Transmitter Fault. LVTTL-O	2
3	TX Disable	Transmitter Disable. Laser output disabled on high or open. LVTT-I.	3
4	SDA	2-Wire Serial Interface Data Line (Same as MOD-DEF2 in INF-8074i). LVTTL-I/O.	
5	SCL	2-Wire Serial Interface Data Line (Same as MOD-DEF2 in INF-8074i). LVTTL-I.	
6	MOD_ABS	Module Absent, Connect to VeeT or VeeR in Module.	4
7	RS0	Rate Select 0. Not used	5
8	LOS	Loss of Signal indication. Logic 0 indicates normal operation. LVTTL-O.	2
9	RS1	Rate Select 1. Not used	5
10	VeeR	Receiver Ground (Common with Transmitter Ground).	1
11	VeeR	Receiver Ground (Common with Transmitter Ground).	1
12	RD-	Receiver Inverted DATA out. AC Coupled. CML-O.	
13	RD+	Receiver Non-inverted DATA out. AC Coupled. CML-O.	
14	VeeR	Receiver Ground (Common with Transmitter Ground).	1
15	VccR	Receiver Power Supply.	
16	VccT	Transmitter Power Supply.	
17	VeeT	Transmitter Ground (Common with Receiver Ground).	1
18	TD+	Transmitter Non-Inverted DATA in. AC Coupled. CML-I.	
19	TD-	Transmitter Inverted DATA in. AC Coupled. CML-O.	
20	VeeT	Transmitter Ground (Common with Receiver Ground).	1

Notes:

1. The module signal ground contacts, VeeR and VeeT, should be isolated from the module case.
2. This contact is an open collector/drain output and should be pulled up to the Vcc_Host with resister in the range 4.7KΩ to 10KΩ. Pull ups can be connected to one or several power supplies, however the host board design shall ensure that no module contract has voltage exceeding module VccT/R +0.5.V.
3. Tx_Disable is an input contact with a 4.7KΩ to 10KΩ pull-up resistor to VccT inside module.
4. Mod_ABS is connected to VeeT or VeeR in the SFP+ module. The host may pull the contract up to Vcc_Host with a resistor in the range from 4.7KΩ to 10KΩ. Mod_ABS is asserted “High” when the SFP+ module is physically absent from a host slot.
5. Internally pulled down per SFF-8431

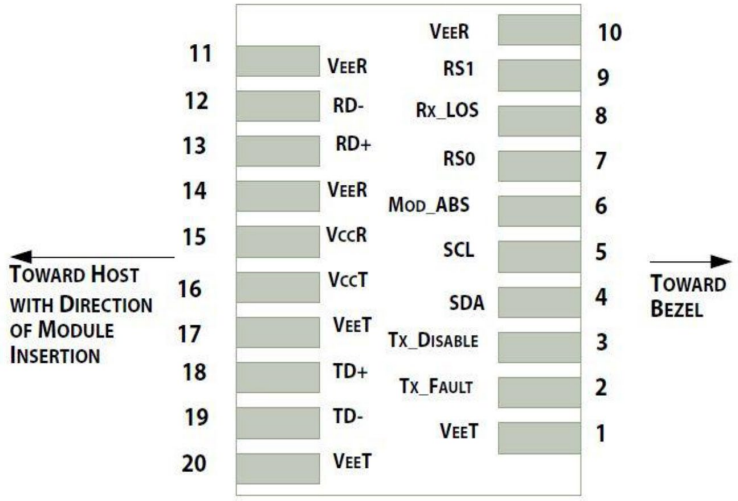

Pin-out of connector Block on Host board

Recommended Circuit Schematic

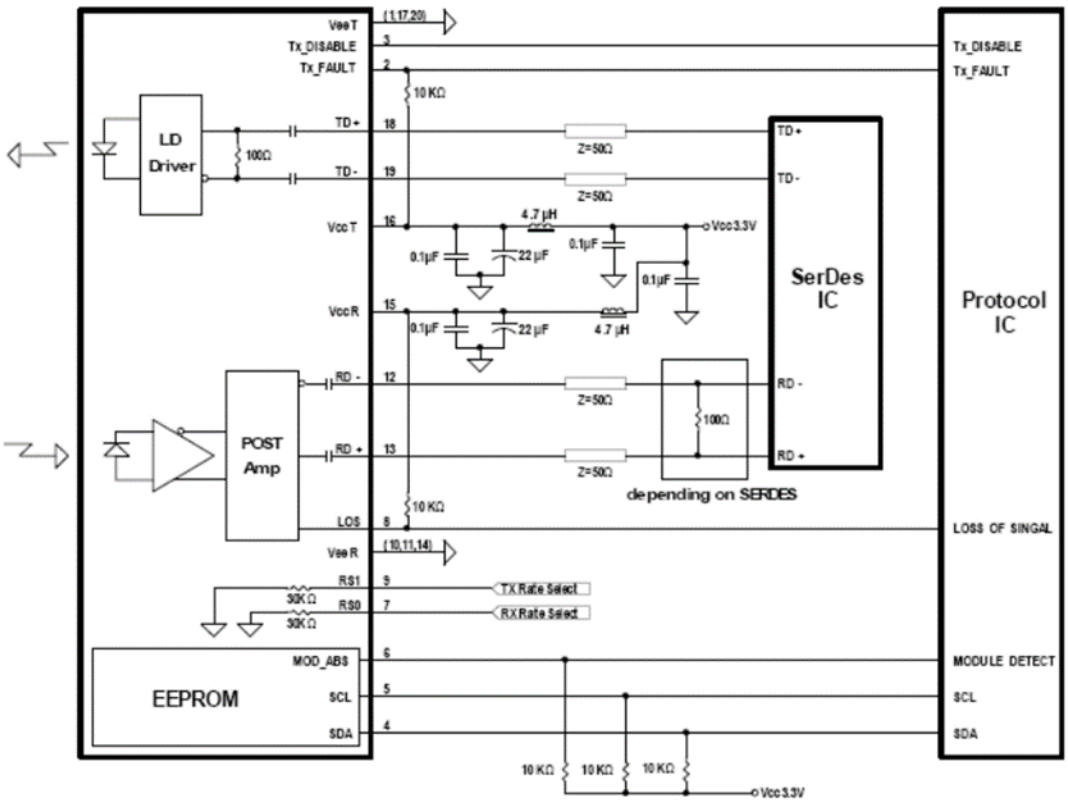

Mechanical Specifications

Small Form Factor Pluggable (SFP) transceivers are compatible with the dimensions defined by the SFP Multi-Sourcing Agreement (MSA).

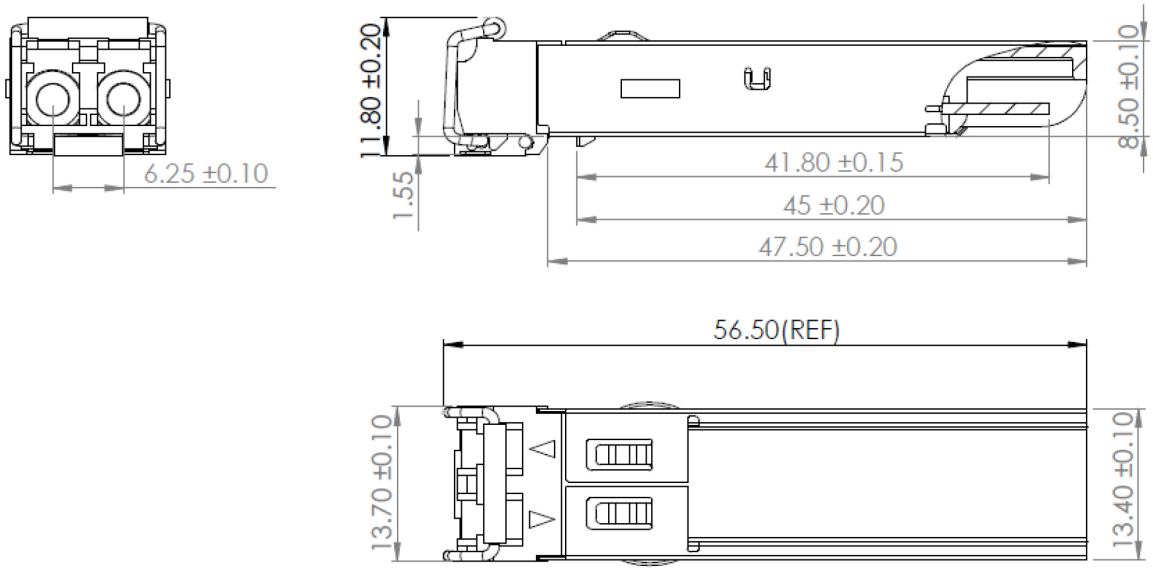

EEPROM Information

EEPROM memory map specific data field description is as below:

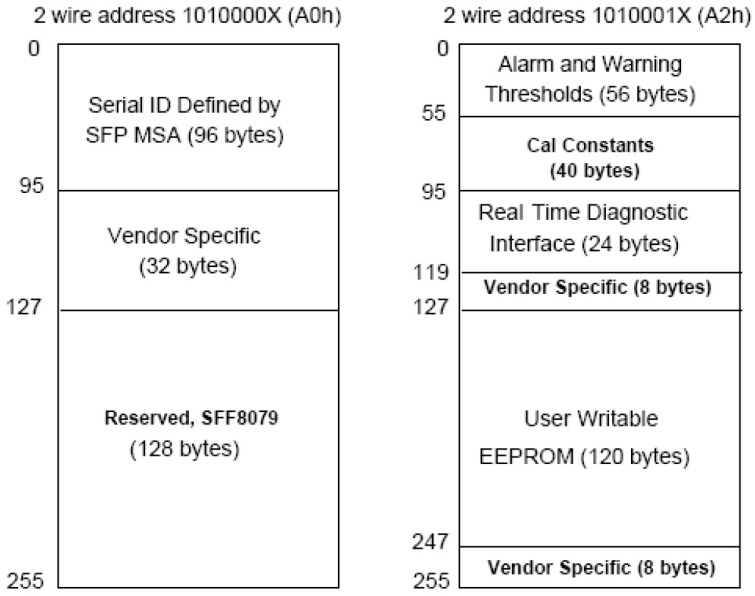

About AddOn Networks

In 1999, AddOn Networks entered the market with a single product. Our founders fulfilled a severe shortage for compatible, cost-effective optical transceivers that compete at the same performance levels as leading OEM manufacturers. Adhering to the idea of redefining service and product quality not previously had in the fiber optic networking industry, AddOn invested resources in solution design, production, fulfillment, and global support.

Combining one of the most extensive and stringent testing processes in the industry, an exceptional free tech support center, and a consistent roll-out of innovative technologies, AddOn has continually set industry standards of quality and reliability throughout its history.

Reliability is the cornerstone of any optical fiber network and is ingrained in AddOn's DNA. It has played a key role in nurturing the long-term relationships developed over the years with customers. AddOn remains committed to exceeding industry standards with certifications ranging from NEBS Level 3 to ISO 9001:2015 with every new development while maintaining the signature reliability of its products.



U.S. Headquarters

Email: sales@addonnetworks.com

Telephone: +1 877.292.1701

Fax: 949.266.9273

Europe Headquarters

Email: salesemea@addonnetworks.com

Telephone: +44 1285 842070