QSFP28-100GB-ER4L-I-N-AO

Alcatel-Lucent Nokia® Compatible TAA 100GBase-ER4L QSFP28 Transceiver (SMF, 1310nm, LC, DOM, 40km, -40 to 85C)

Features:

- SFF-8665 Compliance
- Single-mode Fiber
- Duplex LC Connector
- Hot Pluggable
- Metal with Lower EMI
- Industrial Temperature -40 to 85 Celsius
- RoHS Compliant and Lead Free
- Excellent ESD Protection



Applications:

- 100GBase Ethernet
- Access and Enterprise

Product Description

This Alcatel-Lucent Nokia® compatible QSFP28 transceiver provides 100GBase-ER4L throughput up to 40km over single-mode fiber (SMF) using a wavelength of 1295nm to 1309nm via an LC connector. It can operate at temperatures between -40 and 85C. It is guaranteed to be 100% compatible with the equivalent Alcatel-Lucent Nokia® transceiver. This easy to install, hot swappable transceiver has been programmed, uniquely serialized and data-traffic and application tested to ensure that it will initialize and perform identically. Digital optical monitoring (DOM) support is also present to allow access to real-time operating parameters. This transceiver is Trade Agreements Act (TAA) compliant. We stand behind the quality of our products and proudly offer a limited lifetime warranty.

AddOn's transceivers are RoHS compliant and lead-free.

TAA refers to the Trade Agreements Act (19 U.S.C. & 2501-2581), which is intended to foster fair and open international trade. TAA requires that the U.S. Government may acquire only "U.S.-made or designated country end products."

TAA COMPLIANT

Regulatory Compliance

- ESD to the Electrical PINs: compatible with MIL-STD-883E Method 3015.4
- ESD to the LC Receptacle: compatible with IEC 61000-4-3
- EMI/EMC: compatible with FCC Part 15 Subpart B Rules, EN55022:2010
- Laser Eye Safety: compatible with FDA 21CFR, EN60950-1& EN (IEC) 60825-1,2
- RoHS compliant with EU RoHS 2.0 directive 2015/863/EU

Absolute Maximum Ratings

Parameter	Symbol	Min.	Typ.	Max.	Unit
Storage Temperature	Tstg	-40		85	°C
Operating Case Temperature	Tc	-40	25	85	°C
Power Supply Voltage	Vcc	-0.5		4.0	V
Relative Humidity	RH	5		95	%
Data Rate Per Channel			25.78125		Gbps

Electrical Characteristics

Parameter	Symbol	Min.	Typ.	Max.	Unit	Notes
Supply Voltage	Vcc	3.135	3.3	3.465	V	
Module Supply Current	Icc			1350	mA	
Power Dissipation	P_{DISS}			4500	mW	
Transmitter						
Single-Ended Input Voltage Tolerance		-0.3		4.0	V	
Input Differential Impedance	ZIN		100		Ω	
Differential Data Input Swing	VIN,pp	190		700	mVp-p	
AC Common-Mode Input Voltage Tolerance		15			mVp-p	
Differential Input Voltage Swing Threshold			50		mVp-p	
Receiver						
Single-Ended Output Voltage		-0.3		4.0	V	
Output Differential Impedance	ZOUT	90	100	110	Ω	
Differential Data Output Swing	VOUT,pp	300		850	mVp-p	
AC Common-Mode Output Voltage				7.5	mVp-p	

Optical Characteristics

Parameter	Symbol	Min.	Typ.	Max.	Unit	Notes
Transmitter						
Launch Optical Power Per Lane	Po	-2.9		+2.9	dBm	1
Total Launch Optical Power	Po			+8.9	dBm	1
Center Wavelength Range	L1	1294.53	1295.56	1296.59	nm	
	L2	1299.02	1300.05	1301.09	nm	
	L3	1303.54	1304.58	1305.63	nm	
	L4	1308.09	1309.14	1310.19	nm	
Extinction Ratio	ER	8.0			dB	2
Spectral Width (-20dB)	Δλ			1	nm	
Side-Mode Suppression Ratio	SMSR	30			dB	
Optical Return Loss Tolerance	ORLT			20	dB	
Pout @Tx_Disable Asserted	Poff			-30	dBm	1
Eye Mask: (X1, X2, X3, Y1, Y2, Y3)		(0.25, 0.4, 0.45, 0.25, 0.28, 0.4)				
Receiver						
Center Wavelength	L1	1294.53	1295.56	1296.59	nm	
	L2	1299.02	1300.05	1301.09	nm	
	L3	1303.54	1304.58	1305.63	nm	
	L4	1308.09	1309.14	1310.19	nm	
Sensitivity Per Channel (OMA)	S			-16.6	dBm	3
	S			-20.5	dBm	4
Overload Per Channel	P_{max}	-4.9			dBm	3
Damage Threshold Per Channel	THd	-3.5			dBm	
Receiver Reflectance	RL			-26	dB	
LOS De-Assert	LOSD			-21.0	dBm	
LOS Assert	LOSA	-26.0			dBm	
LOS Hysteresis	LOSH	0.5			dB	

Notes:

1. The optical power is launched into a single-mode fiber.
2. Measured with a PRBS 2^{31}-1 test pattern @25.78125Gbps.
3. Without FEC, measured with PRBS 2^{31}-1 test pattern, 25.78125Gbps, and BER $1.0E^{-12}$.
4. With FEC, measured with PRBS 2^{31}-1 test pattern, 25.78125Gb/s, and BER $5.0E^{-5}$.

Pin Descriptions

Pin	Logic	Symbol	Name/Descriptions	Ref.
1		GND	Module Ground.	1
2	CML-I	Tx2-	Transmitter Inverted Data Input.	
3	CML-I	Tx2+	Transmitter Non-Inverted Data Input.	
4		GND	Module Ground.	1
5	CML-I	Tx4-	Transmitter Inverted Data Input.	
6	CML-I	Tx4+	Transmitter Non-Inverted Data Input.	
7		GND	Module Ground.	1
8	LVTTL-I	MODSEIL	Module Select.	2
9	LVTTL-I	ResetL	Module Reset.	2
10		VccRx	+3.3V Receiver Power Supply.	
11	LVCMOS-I	SCL	2-Wire Serial Interface Clock.	2
12	LVCMOS-I/O	SDA	2-Wire Serial Interface Data.	2
13		GND	Module Ground.	1
14	CML-O	Rx3+	Receiver Non-Inverted Data Output.	
15	CML-O	Rx3-	Receiver Inverted Data Output.	
16		GND	Module Ground.	1
17	CML-O	Rx1+	Receiver Non-Inverted Data Output.	
18	CML-O	Rx1-	Receiver Inverted Data Output.	
19		GND	Module Ground.	1
20		GND	Module Ground.	1
21	CML-O	Rx2-	Receiver Inverted Data Output.	
22	CML-O	Rx2+	Receiver Non-Inverted Data Output.	
23		GND	Module Ground.	1
24	CML-O	Rx4-	Receiver Inverted Data Output.	
25	CML-O	Rx4+	Receiver Non-Inverted Data Output.	
26		GND	Module Ground.	1
27	LVTTL-O	ModPrsL	Module Present. Internally pulled down to GND.	
28	LVTTL-O	IntL	Interrupt output. Should be pulled up on the host board.	2
29		VccTx	+3.3V Transmitter Power Supply.	
30		Vcc1	+3.3V Power Supply.	
31	LVTTL-I	LPMode	Low-Power Mode.	2
32		GND	Module Ground.	1
33	CML-I	Tx3+	Transmitter Non-Inverted Data Input.	
34	CML-I	Tx3-	Transmitter Inverted Data Input.	
35		GND	Module Ground.	1
36	CML-I	Tx1+	Transmitter Non-Inverted Data Input.	
37	CML-I	Tx1-	Transmitter Inverted Data Input.	
38		GND	Module Ground.	1

Notes:

1. Module circuit ground is isolated from the module chassis ground within the module.
2. Open collector. Should be pulled up with 4.7kΩ-10kΩ on the host board to a voltage between 3.15V and 3.6V.

Electrical Pin-Out Details

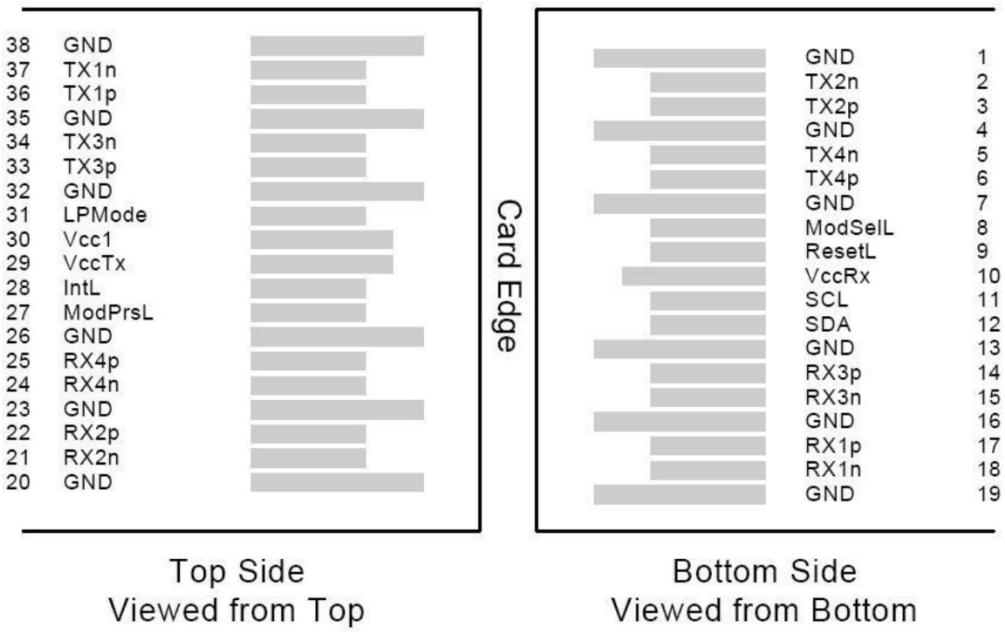

Recommended Host Board Power Supply Filter Network

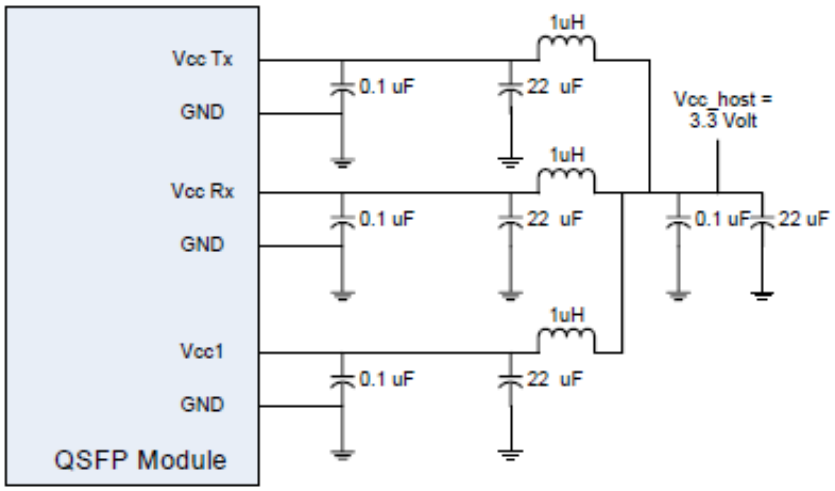

Mechanical Specifications

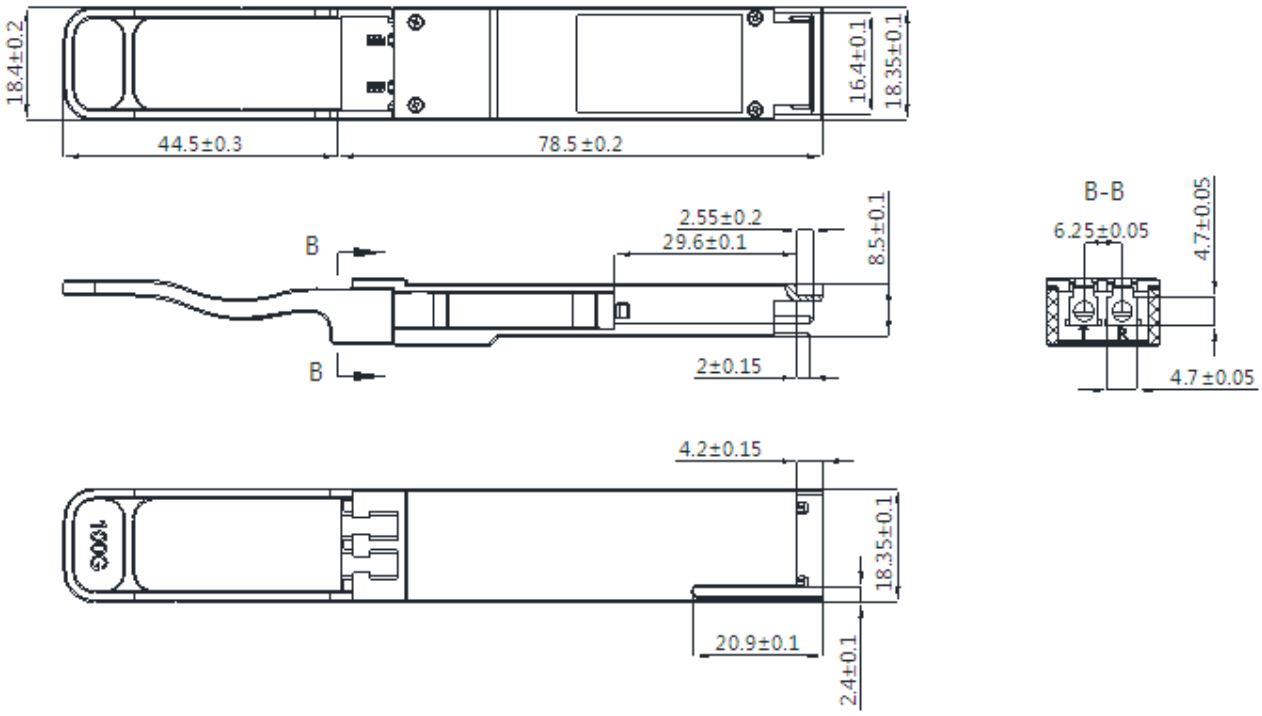

About AddOn Networks

In 1999, AddOn Networks entered the market with a single product. Our founders fulfilled a severe shortage for compatible, cost-effective optical transceivers that compete at the same performance levels as leading OEM manufacturers. Adhering to the idea of redefining service and product quality not previously had in the fiber optic networking industry, AddOn invested resources in solution design, production, fulfillment, and global support.

Combining one of the most extensive and stringent testing processes in the industry, an exceptional free tech support center, and a consistent roll-out of innovative technologies, AddOn has continually set industry standards of quality and reliability throughout its history.

Reliability is the cornerstone of any optical fiber network and is ingrained in AddOn's DNA. It has played a key role in nurturing the long-term relationships developed over the years with customers. AddOn remains committed to exceeding industry standards with certifications ranging from NEBS Level 3 to ISO 9001:2015 with every new development while maintaining the signature reliability of its products.



U.S. Headquarters

Email: sales@addonnetworks.com

Telephone: +1 877.292.1701

Fax: 949.266.9273

Europe Headquarters

Email: salesemea@addonnetworks.com

Telephone: +44 1285 842070