QSFP28-100GB-ZR4-I-N-AO

Alcatel-Lucent Nokia® Compatible TAA 100GBase-ZR4 QSFP28 Transceiver (SMF, 1295nm to 1309nm, 80km, LC, DOM, -40 to 85C)

Features:

- QSFP28 MSA Compliant
- 4 LAN-WDM Lanes MUX/DEMUX Design
- Supports 103.125Gbps Aggregate Bit Rate
- EML Laser and PIN+SOA Receiver
- Single 3.3V Power Supply
- 4x25G Electrical Interface
- Duplex LC Connector
- Maximum Power Consumption of 6.5W
- Single-Mode Fiber
- Industrial Temperature: -40 to 85 Celsius
- Hot Pluggable
- RoHS Compliant and Lead-Free



Applications:

- 100GBase Ethernet
- Access and Enterprise

Product Description

This Alcatel-Lucent Nokia® compatible QSFP28 transceiver provides 100GBase-ZR4 throughput up to 80km over single-mode fiber (SMF) using a wavelength of 1295nm to 1309nm via an LC connector. It is capable of withstanding -40 to 85C environments and can operate at temperatures between -40 and 85C. Our transceiver is built to meet or exceed OEM specifications and is guaranteed to be 100% compatible with Alcatel-Lucent Nokia®. It has been programmed, uniquely serialized, and tested for data-traffic and application to ensure that it will initialize and perform identically. All of our transceivers comply with Multi-Source Agreement (MSA) standards to provide seamless network integration. Additional product features include Digital Optical Monitoring (DOM) support which allows access to real-time operating parameters. This transceiver is Trade Agreements Act (TAA) compliant. We stand behind the quality of our products and proudly offer a limited lifetime warranty.

AddOn's transceivers are RoHS compliant and lead-free.

TAA refers to the Trade Agreements Act (19 U.S.C. & 2501-2581), which is intended to foster fair and open international trade. TAA requires that the U.S. Government may acquire only "U.S.-made or designated country end products."

TAA COMPLIANT

Absolute Maximum Ratings

Parameter	Symbol	Min.	Max.	Unit	Notes
Maximum Supply Voltage	Vcc	0	3.6	V	
Storage Temperature	Tstg	-40	85	°C	
Operating Case Temperature	Tc	-40	85	°C	1
Operating Humidity	RH	0	85	%	

Notes:

1. Industrial temperature range.

Electrical Characteristics

Parameter	Symbol	Min.	Typ.	Max.	Unit	Notes
Power Supply Voltage	Vcc	3.13	3.30	3.47	V	
Power Dissipation				6.5	W	
Transmitter						
Data Rate Per Lane			25.78125		Gbps	
Differential Voltage Pk-Pk	Vpp			900	mV	1
Common-Mode Voltage	Vcm	-350		2850	mV	
Transition Time	Tr/Tf	10			ps	2
Differential Termination Resistance Mismatch				10	%	
Eye Width	EW15	0.46			UI	
Eye Height	EH15	95			mV	
Receiver						
Data Rate Per Lane			25.78125		Gbps	
Differential Termination Resistance Mismatch				10	%	1
Differential Output Voltage Swing	VOUT,pp			900	mV	
Common-Mode Noise (RMS)	Vrms			17.5	mV	
Transition Time	Tr/Tf	12			ps	2
Eye Width	EW15	0.57			UI	
Eye Height	EH15	228			mV	

Notes:

1. At 1MHz.
2. 20-80%.

Optical Characteristics

Parameter	Symbol	Min.	Typ.	Max.	Unit	Notes
9/125µm G.652 SMF	Lmax			80	km	
Transmitter						
Signaling Speed Per Lane		25.78125±100ppm			Gbps	
Optical Wavelength	L0	1294.53		1296.59	nm	
	L1	1299.02		1301.09	nm	
	L2	1303.54		1305.63	nm	
	L3	1308.09		1310.19	nm	
Side-Mode Suppression Ratio	SMSR	30			dB	
Total Average Launch Power		8		12.5	dBm	
Average Launch Power Per Lane		2		6.5	dBm	
Difference in Launch Power Between Any Two Lanes (Average and OMA)				3	dBm	
Average Launch Power of Off Transmitter Per Lane				-30	dBm	
Extinction Ratio	ER	6			dB	
RIN OMA				-130	dB/Hz	
Optical Return Loss Tolerance	ORLT			20	dB	
Transmitter Reflectance				-12	dB	
Transmitter Eye Mask Definition: (X1, X2, X3, Y1, Y2, Y3)		(0.25, 0.4, 0.45, 0.25, 0.28, 0.4)				1
Mask Margin		5			%	
Receiver						
Signaling Speed Per Lane		25.78125±100ppm			Gbps	
Receive Wavelengths	L0	1294.53		1296.59	nm	
	L1	1299.02		1301.09	nm	
	L2	1303.54		1305.63	nm	
	L3	1308.09		1310.19	nm	
Average Receiver Power Per Lane		-28		-7	dBm	
Receiver Power Per Lane (OMA)				-7	dBm	
Receiver Reflectance				-26	dB	
Receiver Sensitivity Average Per Lane				-28	dBm	1
Receiver 3dB Electrical Upper Cutoff Frequency Per Lane				31	GHz	
Damage Threshold Per Lane		6.5			dBm	
LOS De-Assert	LOSD			-29	dBm	
LOS Assert	LOSA	-40			dBm	
LOS Hysteresis	LOSH	0.5			dB	

Notes:

1. Sensitivity is specified at BER@$5E^{-5}$ with FEC.

Pin Descriptions

Pin	Symbol	Name/Description	Notes
1	GND	Module Ground.	1
2	Tx2-	Transmitter Inverted Data Input.	
3	Tx2+	Transmitter Non-Inverted Data Input.	
4	GND	Module Ground.	1
5	Tx4-	Transmitter Inverted Data Input.	
6	Tx4+	Transmitter Non-Inverted Data Input.	
7	GND	Module Ground.	1
8	ModSelL	Module Select.	
9	ResetL	Module Reset.	
10	VccRx	+3.3V Receiver Power Supply.	
11	SCL	2-Wire Serial Interface Clock.	
12	SDA	2-Wire Serial Interface Data.	
13	GND	Module Ground.	1
14	Rx3+	Receiver Non-Inverted Data Output.	
15	Rx3-	Receiver Inverted Data Output.	
16	GND	Module Ground.	1
17	Rx1+	Receiver Non-Inverted Data Output.	
18	Rx1-	Receiver Inverted Data Output.	
19	GND	Module Ground.	1
20	GND	Module Ground.	1
21	Rx2-	Receiver Inverted Data Output.	
22	Rx2+	Receiver Non-Inverted Data Output.	
23	GND	Module Ground.	1
24	Rx4-	Receiver Non-Inverted Data Output.	
25	Rx4+	Receiver Inverted Data Output.	
26	GND	Module Ground.	1
27	ModPrsL	Module Present.	
28	IntL	Interrupt.	
29	VccTx	+3.3V Transmitter Power Supply.	
30	Vcc1	+3.3V Power Supply.	
31	LPMode	Low-Power Mode.	
32	GND	Module Ground.	1
33	Tx3+	Transmitter Non-Inverted Data Input.	
34	Tx3-	Transmitter Inverted Data Input.	
35	GND	Module Ground.	1

36	Tx1+	Transmitter Non-Inverted Data Input.	
37	Tx1-	Transmitter Inverted Data Input.	
38	GND	Module Ground.	1

Notes:

1. Circuit ground is internally isolated from the chassis ground.

Electrical Pad Layout

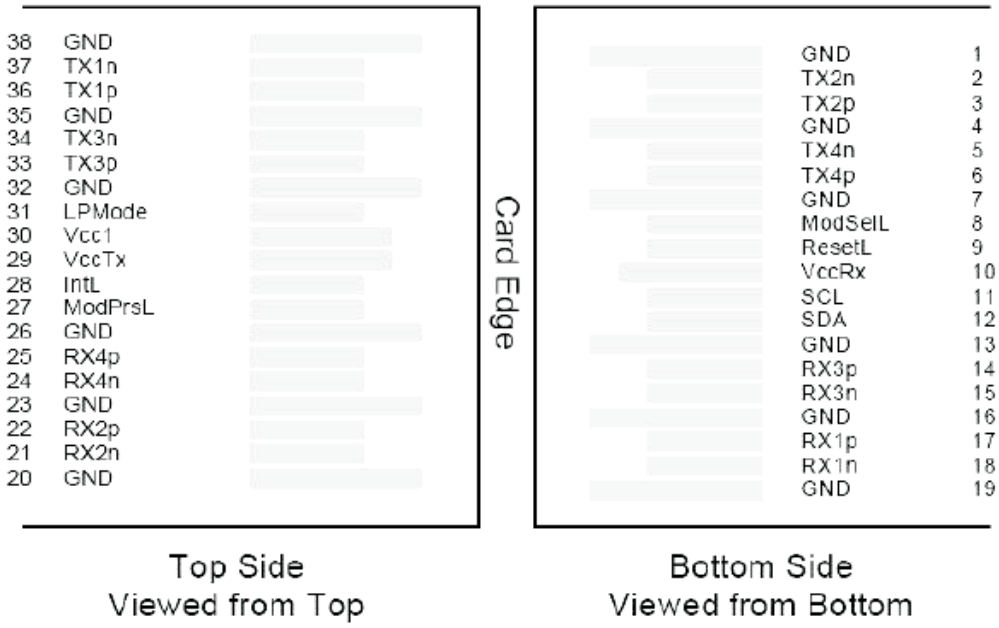

Pin-Out of Connector Block on the Host Board

Transceiver Block Diagram

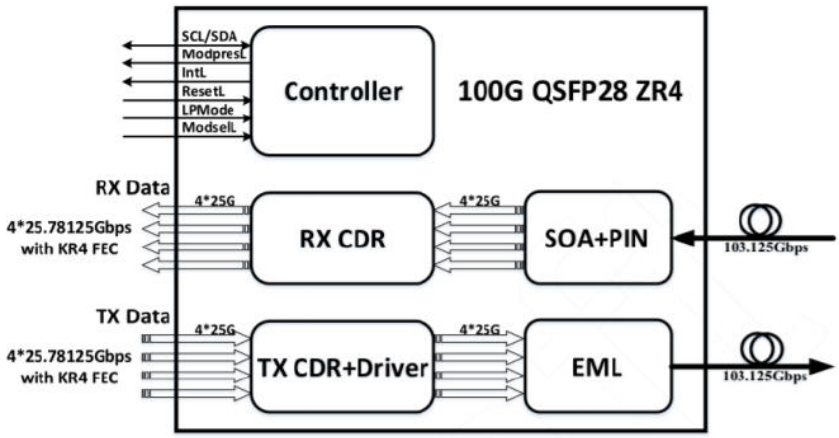

EEPROM Information

EEPROM memory map-specific data field description is as below:

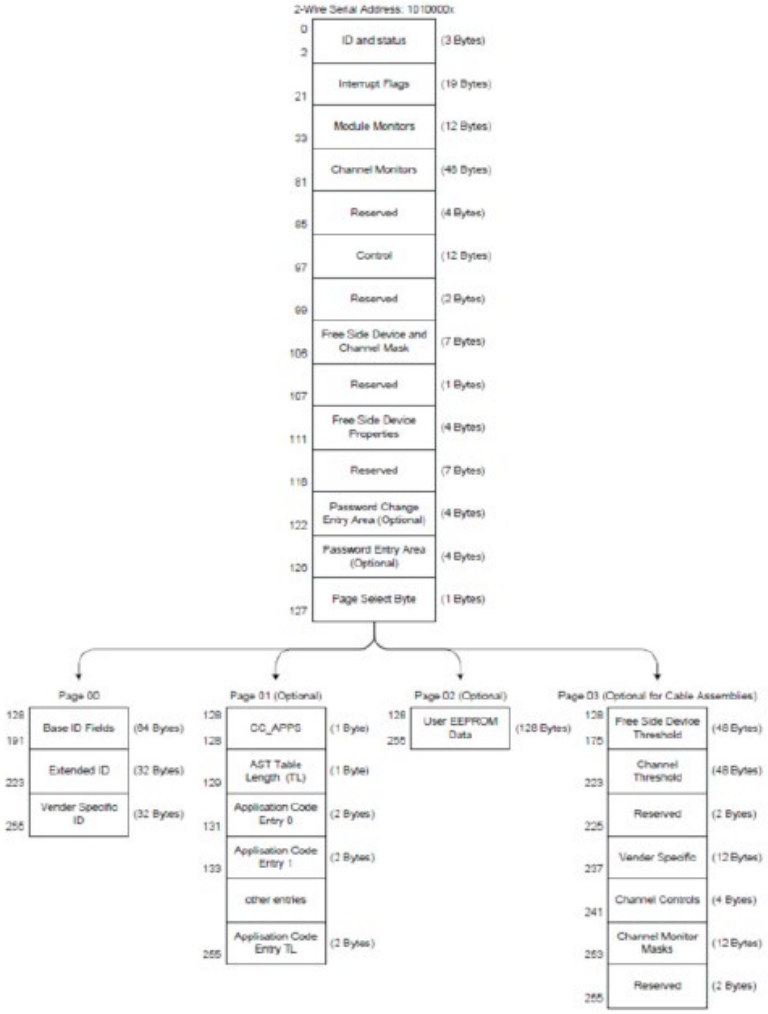

Digital Diagnostic Monitoring Interface

Parameter	Related Bytes (A0[00] Memory)	Accuracy	Notes
Temperature	22 to 23	±3°C	1, 2
Voltage	26 to 27	<3%	2
Bias Current	42 to 49	<10%	2
Tx Power	50 to 57	<3dB	2
Rx Power	34 to 41	<3dB	2

Notes:

1. Actual temperature test point is fixed on the module case around the laser.
2. Full operating temperature range.
3. Five transceiver parameter values are monitored. The table above defines the Monitory parameter's accuracy.

Mechanical Specifications

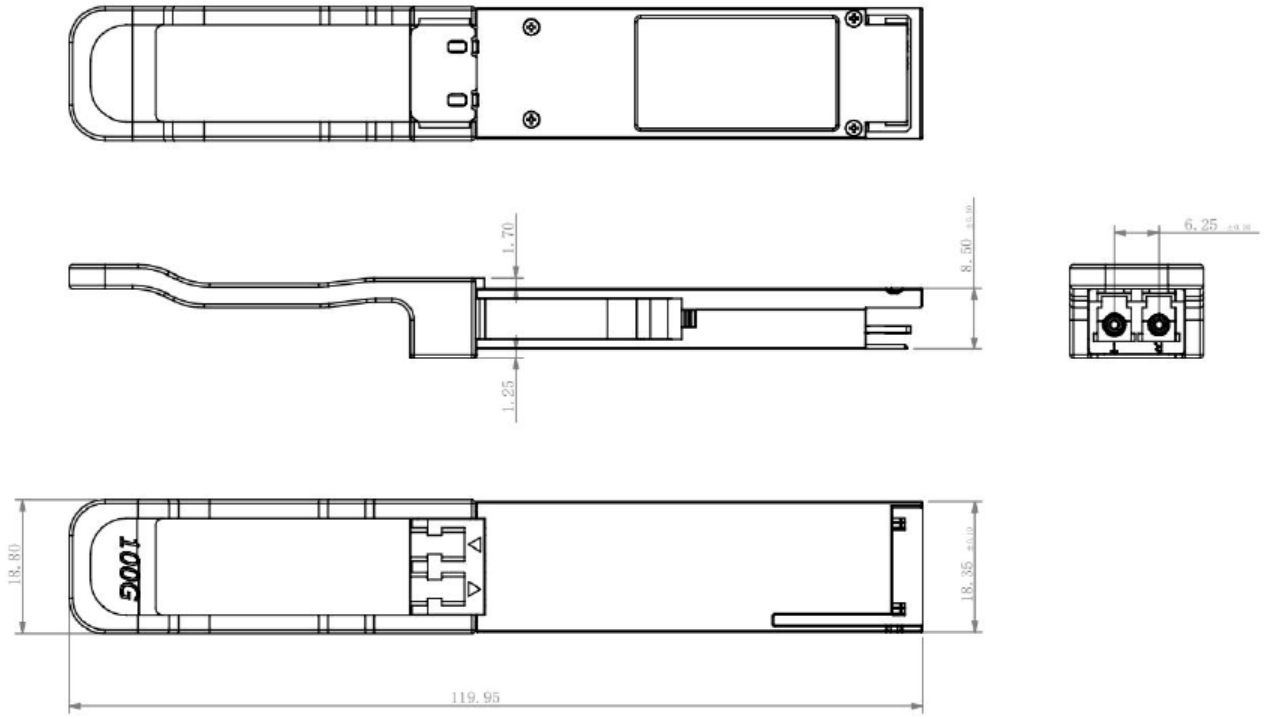

About AddOn Networks

In 1999, AddOn Networks entered the market with a single product. Our founders fulfilled a severe shortage for compatible, cost-effective optical transceivers that compete at the same performance levels as leading OEM manufacturers. Adhering to the idea of redefining service and product quality not previously had in the fiber optic networking industry, AddOn invested resources in solution design, production, fulfillment, and global support.

Combining one of the most extensive and stringent testing processes in the industry, an exceptional free tech support center, and a consistent roll-out of innovative technologies, AddOn has continually set industry standards of quality and reliability throughout its history.

Reliability is the cornerstone of any optical fiber network and is ingrained in AddOn's DNA. It has played a key role in nurturing the long-term relationships developed over the years with customers. AddOn remains committed to exceeding industry standards with certifications ranging from NEBS Level 3 to ISO 9001:2015 with every new development while maintaining the signature reliability of its products.



U.S. Headquarters

Email: sales@addonnetworks.com

Telephone: +1 877.292.1701

Fax: 949.266.9273

Europe Headquarters

Email: salesemea@addonnetworks.com

Telephone: +44 1285 842070