SFP-10GB-DW-C-H-N-C

Alcatel-Lucent Nokia® Compatible TAA 10GBase-DWDM SFP+ Transceiver (SMF, Tunable, 80km, LC, DOM, -40 to 92C, Up to Ch.63)

Features:

- 50GHz ITU-Based Channel Spacing (C-Band)
- Auto-Tunable
- Data Rate 1.2Gbps to 11.3Gbps
- Supports 80km Link Distances
- APD Receiver with Limiting Amplifier
- Low Power Consumption Maximum: 2.3W
- Negative Chirp Transmitter with ILMZ (Integrated Laser Mach Zehnder) TOSA
- Power Supply Lines: 3.3V
- Operating Temperature: -40 to 92 Celsius
- RoHS Compliant and Lead-Free

Applications:

- 10x Gigabit Ethernet over DWDM
- 8x/10x Fibre Channel

Product Description

This Alcatel-Lucent Nokia® compatible SFP+ transceiver provides 10GBase-DWDM throughput up to 80km over single-mode fiber (SMF) using a tunable wavelength via an LC connector. It can operate at temperatures between -40 and 92C. It is guaranteed to be 100% compatible with the equivalent Alcatel-Lucent Nokia® transceiver. This easy to install, hot swappable transceiver has been programmed, uniquely serialized and data-traffic and application tested to ensure that it will initialize and perform identically. Digital optical monitoring (DOM) support is also present to allow access to real-time operating parameters. We stand behind the quality of our products and proudly offer a limited lifetime warranty.

ProLabs' transceivers are RoHS compliant and lead-free.

TAA refers to the Trade Agreements Act (19 U.S.C. & 2501-2581), which is intended to foster fair and open international trade. TAA requires that the U.S. Government may acquire only "U.S.-made or designated country end products.")

Rev. 012026

ITU Channel Wavelength Guide

ITU Channel	Frequency (THz)	Center Wavelength (nm)	ITU Channel	Frequency (THz)	Center Wavelength (nm)
13.5	191.35	1566.72	**39**	193.90	1546.12
14	191.40	1566.31	**39.5**	193.95	1545.72
14.5	191.45	1565.90	**40**	194.00	1545.32
15	191.50	1565.50	**40.5**	194.05	1544.92
15.5	191.55	1565.09	**41**	194.10	1544.53
16	191.60	1564.68	**41.5**	194.15	1544.13
16.5	191.65	1564.27	**42**	194.20	1543.73
17	191.70	1563.86	**42.5**	194.25	1543.33
17.5	191.75	1563.45	**43**	194.30	1542.94
18	191.80	1563.05	**43.5**	194.35	1542.54
18.5	191.85	1562.64	**44**	194.40	1542.14
19	191.90	1562.23	**44.5**	194.45	1541.75
19.5	191.95	1561.83	**45**	194.50	1541.35
20	192.00	1561.42	**45.5**	194.55	1540.95
20.5	192.05	1561.01	**46**	194.60	1540.56
21	192.10	1560.61	**46.5**	194.65	1540.16
21.5	192.15	1560.20	**47**	194.70	1539.77
22	192.20	1559.79	**47.5**	194.75	1539.37
22.5	192.25	1559.39	**48**	194.80	1538.98
23	192.30	1558.98	**48.5**	194.85	1538.58
23.5	192.35	1558.58	**49**	194.90	1538.19
24	192.40	1558.17	**49.5**	194.95	1537.79
24.5	192.45	1557.77	**50**	195.00	1537.40
25	192.50	1557.36	**50.5**	195.05	1537.00
25.5	192.55	1556.96	**51**	195.10	1536.61
26	192.60	1556.56	**51.5**	195.15	1536.22
26.5	192.65	1556.15	**52**	195.20	1535.82
27	192.70	1555.75	**52.5**	195.25	1535.43
27.5	192.75	1555.34	**53**	195.30	1535.04
28	192.80	1554.94	**53.5**	195.35	1534.64
28.5	192.85	1554.54	**54**	195.40	1534.25
29	192.90	1554.13	**54.5**	195.45	1533.86
29.5	192.95	1553.73	**55**	195.50	1533.47
30	193.00	1553.33	**55.5**	195.55	1533.07
30.5	193.05	1552.93	**56**	195.60	1532.68
31	193.10	1552.52	**56.5**	195.65	1532.29
31.5	193.15	1552.12	**57**	195.70	1531.90
32	193.20	1551.72	**57.5**	195.75	1531.51
32.5	193.25	1551.32	**58**	195.80	1531.12
33	193.30	1550.92	**58.5**	195.85	1530.72
33.5	193.35	1550.52	**59**	195.90	1530.33
34	193.40	1550.12	**59.5**	195.95	1529.94
34.5	193.45	1549.72	**59.5**	195.95	1529.94
35	193.50	1549.32	**60**	196.00	1529.55
35.5	193.55	1548.91	**60.5**	196.05	1529.16
36	193.60	1548.52	**61**	196.10	1528.77
36.5	193.65	1548.11	**61.5**	196.15	1528.38

37	193.70	1547.72	**62**	196.20	1527.99
37.5	193.75	1547.32	**62.5**	196.25	1527.61
38	193.80	1546.92	**63**	196.30	1527.21
38.5	193.85	1546.52			

Absolute Maximum Ratings

Parameter	Symbol	Min.	Max.	Unit	Notes
Maximum Supply Voltage	Vcc	0	3.6	V	+3.3V
Optical Receiver Input	P_{IMAX}		5	dBm	Average
Operating Case Temperature	Tc	-40	92	°C	
Storage Temperature	T_{stg}	-40	85	°C	
ESD SFI Pins	ESD1		1	kV	HBM
ESD Except for SFI Pins	ESD2		2	kV	HBM
Data Rate	DR	1.2	11.3	Gbps	NRZ

Electrical Characteristics

Parameter	Symbol	Min.	Typ.	Max.	Unit	Notes
Supply Voltage	Vcc	3.135	3.3	3.465	V	3.3V
Supply Current	Icc			0.73 0.86	A	-40°C to 85°C 86°C to 92°C
Power Consumption				2.3 2.7	W	-40°C to 85°C 86°C to 92°C
Low-Speed Control Pin Logic Levels						
Host_Vcc Range	Host_Vcc	3.14		3.47	V	With ±5% variation
Tx_Fault, Rx_LOS	VOL	0.0		0.4	V	Note 1
	VOH	Host_Vcc-0.5		Host_Vcc+0.3	V	Note 1
Tx_Disable	VIL	-0.3		0.8	V	Pulled up with 10kΩ to the VccT in the module
	VIH	2.0		VccT+0.3	V	

Notes:

1. Rpullup (Rp) is the pull-up resistor. Active bus termination may be used by the host in place of a pull-up resistor. Pull-ups can be connected to multiple power supplies; however, the host board design shall ensure that no module pin has a voltage exceeding the module. Measures at the host side of the connector.

Optical Characteristics

Parameter	Symbol	Min.	Typ.	Max.	Unit	Notes
SBS Threshold		10			dBm	
Transmitter						
Frequency Range		191.35		196.30	THz	50GHz Grid, 96 Channels
Frequency Accuracy		-2.5		2.5	GHz	EOL
Optical Transmit Power	Po	-1		3	dBm	EOL
Shuttered Output Power				-35	dBm	
Optical Power Stability	ΔPo	-1		1	dB	All Channels, SOL
Side-Mode Suppression	SMSR	35			dB	±2.5nm, Modulated
Spectral Width	Δλ		0.3	0.5	nm	-20dB, Modulated
Extinction Ratio	ER	8.2			dB	Filtered, 10.3Gbps
Eye Diagram Compliance		GR-253, ITU-T G.691				
Mask Margin		10			%	
Tuning Speed				10	s	Warmed-Up, From Any CH to Any Other CH
Receiver						
Input Operating Wavelength		1525		1575	nm	
Minimum Receiver Sensitivity (Back-to-Back)	P_{rmin}			-24	dBm	10.709Gbps, $1E^{-12}$, OSNR>35dB
Minimum Receiver Sensitivity (-300~+1400ps/nm)	P_{rmin}			-21	dBm	
Maximum Input Power (Overload)	Pro	-7			dBm	
Receiver Reflectance	RL			-27	dB	
LOS Assert		-27.5			dBm	Note 1
LOS De-Assert				-24	dBm	Note 1
LOS Hysteresis		0.1			dB	Note 1
LOS Assert Time				100	µs	
LOS De-Assert Time				100	µs	

Notes:

1.

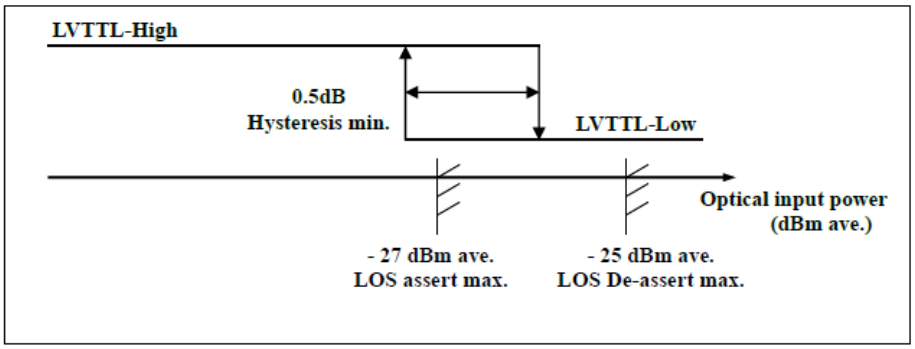

SFP+ 2-Wire Interface Requirements

Parameter	Symbol	Min.	Max.	Unit	Notes/Conditions
Timing Requirements					
Clock Frequency	fSCL	100	400	kHz	
Clock Pulse Width - Low	tLOW	1.3		µs	
Clock Pulse Width - High	tHIGH	0.6		µs	
Time Bus is Free Before a New Transaction Can Start	tBUF	20		µs	Between STOP and START
START Hold Time	tHD,STA	0.6		µs	
START Set-Up Time	tSU,STA	0.6		µs	
Data In Hold Time	tHD,DAT	0		µs	
Data In Set-Up Time	tSU,DAT	0.1		µs	
Input Rise Time (100kHz)	tR,100		1000	ns	Note 1
Input Rise Time (400kHz)	tR,400		300	ns	Note 1
Input Fall Time (100kHz)	tF,100		300	ns	Note 1
Input Fall Time (400kHz)	tF,400		300	ns	Note 1
STOP Set-Up Time	tSU,STO	0.6		µs	
Serial Interface Clock Hold-Off "Clock Stretching"	T_clock_hold		500	µs	Maximum time the SFP+ may hold the SCL line "low" before continuing R or W operation
Complete Single or Sequential Write	tWR		40	ms	Complete (up to) 8-byte write
Endurance (Write Cycles)		10k		cycles	@Max. operating temperature
Physical Interface					
SCL and SDA	VOL	0.0	0.40	V	Rpullup[2] pulled to Host_Vcc, IOL(max.) = 3mA
	VOH	Host_Vcc – 0.5	Host_Vcc + 0.3	V	Rpullup[2] pulled to Host_Vcc
	VIL	-0.3	VccT * 0.3	V	
	VIH	VccT * 0.7	VccT + 0.5	V	
Host_Vcc Range	Host_Vcc	3.14	3.47	V	
Input Current on SCL and SDA Pins	IL	-10	10	µA	
Capacitance on SCL and SDA Pins	Ci[2]		14	pF	
Total Bus Capacitance for SCL and SDA	Cb[3]		100	pF	At 400kHz, Rp (max.) = 3.0kΩ At 100kHz, Rp (max.) = 8.0kΩ
			290	pF	At 400kHz, Rp (max.) = 1.1kΩ At 100kHz, Rp (max.) = 2.75kΩ

Notes:

1. From (VIL, MAX-0.15) to (VIH, MIN+0.15).
2. Rpullup (Rp) is the pull-up resistor. Active bus termination may be used by the host in place of a pull-up resistor. Pull-ups can be connected to multiple power supplies; however, the host board design shall ensure that no module pin has voltage exceeding the module. Measured at the host side of the connector. VccT/R+0.5V nor requires the module to sink more than 3.0mA current.

3. Ci is the capacitance looking into the module SCL and SDA pins.
4. Cb is the total bus capacitance on the SCL or SDA bus.

SFP+ Timing Diagram

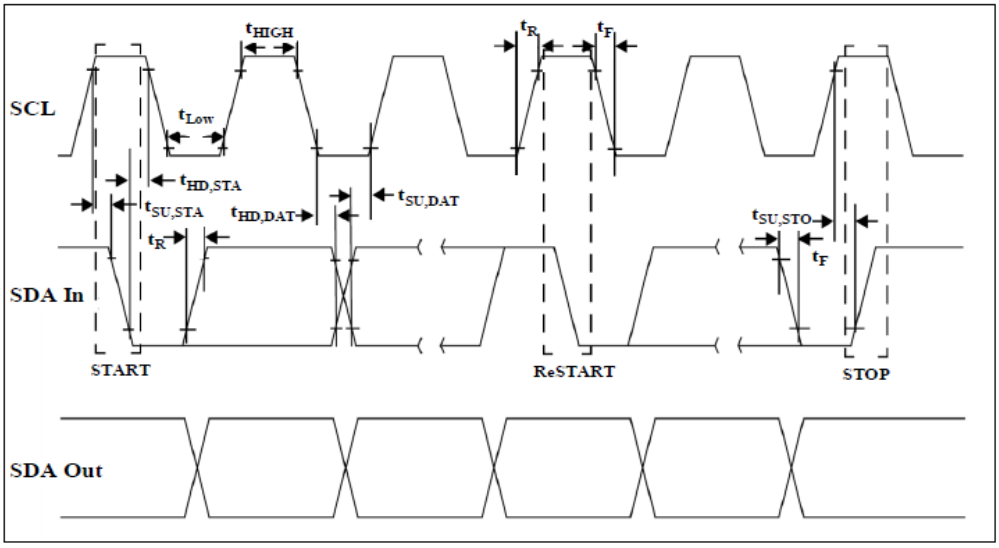

Physical Interface

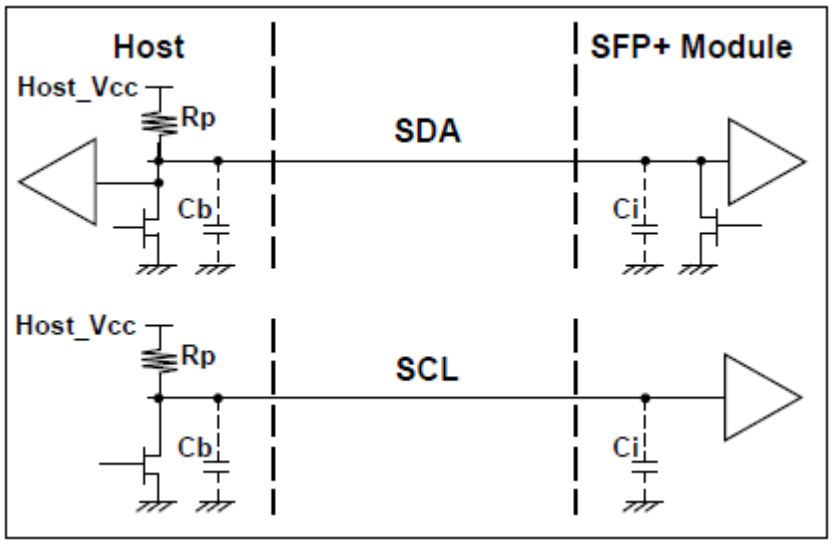

SFP+ Timing Requirements

Parameter	Symbol	Min.	Max.	Unit	Notes/Conditions
Tx_Disable Assert Time	t_off		100	µs	Rising edge of Tx_Disable to fall off output signal below 10% of nominal.
Tx_Disable Negate Time	t_on		2	ms	Falling edge of Tx_Disable to rise output signal above 90% of nominal. This only applies in normal operation, not during start-up or fault recovery.
Time to Initialize 2-Wire Interface	t_2w_start_up		300	ms	From power on or hot plug after the supply meeting.
Time to Initialize Cooled Module and Time to Power Up a Cooled Module to Power Level II	t_start_up_ cooled		90	sec	From power supplies meeting or hot plug, or Tx_Disable negated during power up or Tx_Fault recovery, until cooled Power Level II part during fault recovery is fully operational. Also, from stop bit-low-to-high SDA transition enabling Power Level II until the cooled module is fully operational.
Tx_Fault Assert for Cooled Module	Tx_fault_on_ cooled		1	ms	From occurrence of fault to assertion of Tx_Fault.
Tx_Fault Reset	t_reset	10		µs	Time Tx_Disable must be held “high” to reset Tx_Fault.
Rx_LOS Assert Delay	t_los_on		100	µs	From occurrence of loss of signal to assertion of Rx_LOS.
Rx_LOS Negate Delay	t_los_off		100	µs	From occurrence of presence of signal to negation of Rx_LOS.
Maximum Current Ramp on Power Supply					
Icc Instantaneous Peak Current			800	mA	Notes 1, 2
Icc Sustained Peak Current			660	mA	Notes 1, 2

Notes:

1. The maximum currents are the allowed currents for each power supply (VccT or VccR); therefore, the total module peak currents can be twice this value. The instantaneous peak current is allowed to exceed to specified maximum current capacity of the connector contact for a short period.
2. Not to exceed the sustained peak limit for the more than 50µs. May exceed this limit for shorter durations.

Pin Descriptions

Pin	Logic	Symbol	Power Sequence Order	Name/Description	Notes
1		VeeT	1	Module Transmitter Ground.	1
2	LVTTL-O	Tx_Fault	3	Module Transmitter Fault.	2
3	LVTTL-I	Tx_Disable	3	Transmitter Disable. Turn off the laser output.	3
4	LVTTL-I/O	SDA	3	2-Wire Serial Interface Data.	
5	LVTTL-I/O	SCL	3	2-Wire Serial Interface Clock.	
6		MOD_ABS	3	Module Absent. Connected to the VeeT or VeeR in the module.	4
7	LVTTL-I	RS0	3	N/A. 30kΩ pull-down inside the module.	
8	LVTTL-O	Rx_LOS	3	Receiver Loss of Signal Indicator.	2
9	LVTTL-I	RS1	3	N/A. 30kΩ pull-down inside the module.	
10		VeeR	1	Module Receiver Ground.	1
11		VeeR	1	Module Receiver Ground.	1
12	CML-O	RD-	3	Receiver Inverted Data Output (SFI).	
13	CML-O	RD+	3	Receiver Non-Inverted Data Output (SFI).	
14		VeeR	1	Module Receiver Ground.	1
15		VccR	2	3.3V Module Receiver Supply.	5
16		VccT	2	3.3V Module Transmitter Supply.	5
17		VeeT	1	Module Transmitter Ground.	1
18	CML-I	TD+	3	Transmitter Non-Inverted Data Output (SFI).	
19	CML-I	TD-	3	Transmitter Inverted Data Output (SFI).	
20		VeeT	1	Module Transmitter Ground.	1

Notes:

1. The module signal ground pins, VeeR and Veet, are isolated from the module case.
2. This pin is an open drain output pin and shall be pulled up with a 4.7kΩ to 10kΩ to the Host_Vcc on the host board. Pull-ups can be connected to multiple power supplies; however, the host board design shall ensure that no module pin has a voltage exceeding module VccT/R+0.5V.
3. This pin is an input pin with 10kΩ pull-up to the VccT in the module.
4. This pin shall be pulled up with 4.7kΩ to 10kΩ to the Host_Vcc on the host board.
5. Vcct and VccR are tied together inside the module.

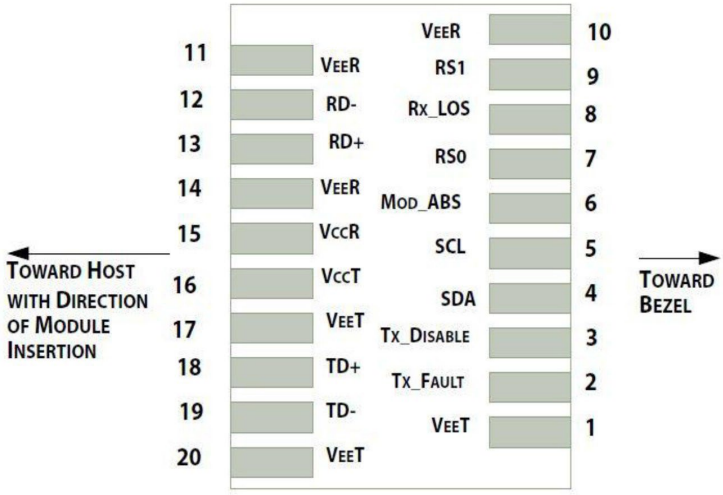

Pin-Out of Connector Block on the Host Board

Recommended Circuit Schematic

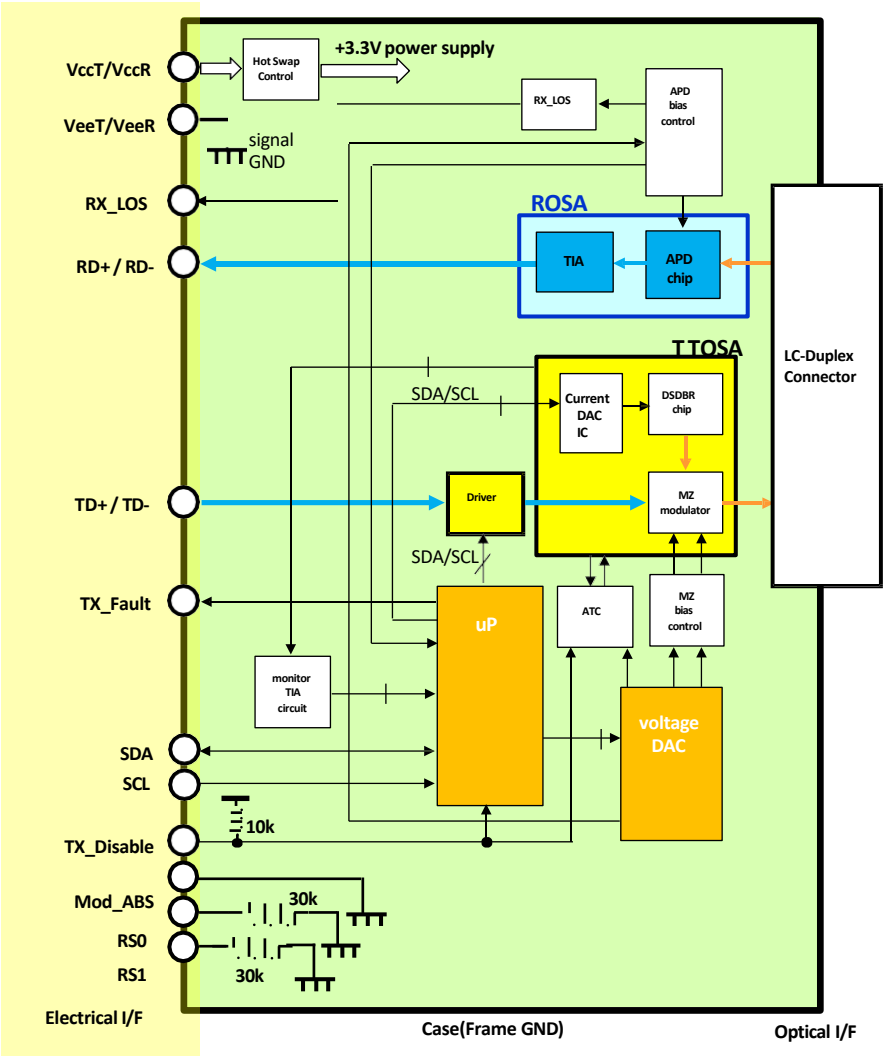

Mechanical Specifications

Side view

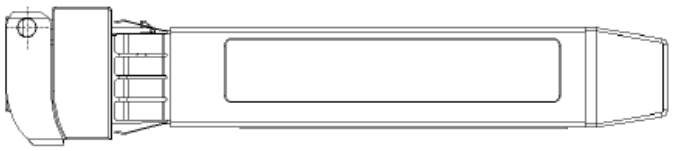

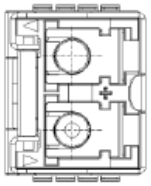

Top view

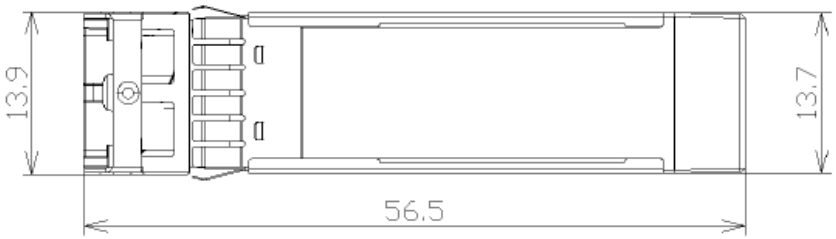

Side view

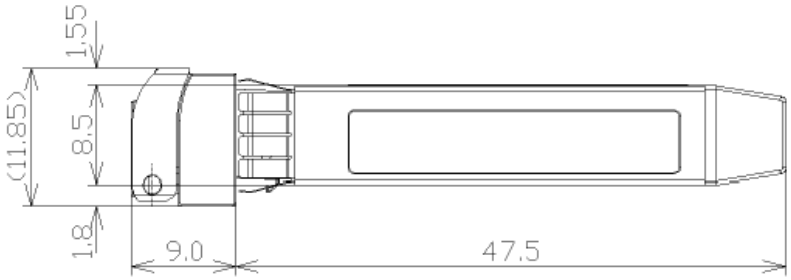

Bottom view

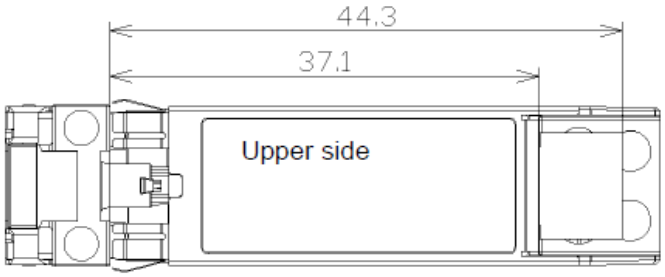

About ProLabs

Our extensive experience comes as standard. For over 20 years ProLabs has delivered optical connectivity solutions that give our customers freedom and choice through our ability to provide seamless interoperability. At the heart of our company is the ability to provide state-of-the-art optical transport and connectivity solutions that are compatible with more than 100 optical switching and transport platforms.

A Complete Portfolio of Network Solutions

ProLabs is focused on innovations in optical transport and connectivity. The combination of our knowledge of optics and networking equipment enables ProLabs to be your single source for optical transport and connectivity solutions from 100Mb to 1.6T while providing innovative solutions that increase network efficiency. We provide the optical connectivity expertise that is compatible with and enhances your switching and transport equipment.

The Trusted Partner

Customer service is our number one value. ProLabs has invested in people, labs and manufacturing capacity to ensure compatible products, and immediate answers to your questions. With Engineering and Manufacturing offices in the U.K. and U.S. augmented by field offices throughout the U.S., U.K. and Asia, ProLabs is able to be our customers best advocate 24 hours a day.

Contact Information

ProLabs US

Email: sales@prolabs.com
Telephone: 952-852-0252

ProLabs UK

Email: salessupport@prolabs.com
Telephone: +44 1285 719 600