QSFP-100GB-ER1-N-AO

Alcatel-Lucent Nokia® Compatible TAA Compliant 100GBase-ER1 QSFP28 Single Lambda Transceiver (SMF, 1310nm, 40km, LC, DOM)

Features:

- Compliant with QSFP28 MSA
- Duplex LC Connector
- Supports 106.25Gbps (PAM4)
- Single-mode Fiber
- Commercial Temperature 0 to 70 Celsius
- High Sensitivity APD Receiver
- Excellent ESD Protection
- Hot Pluggable
- RoHS Compliant and Lead Free
- Metal with Lower EMI



Applications:

- 100GBase Ethernet
- Access and Enterprise

Product Description

This Alcatel-Lucent Nokia® compatible QSFP28 transceiver provides 100GBase-ER1 throughput up to 40km over single-mode fiber (SMF) using a wavelength of 1310nm via an LC connector. It is guaranteed to be 100% compatible with the equivalent Alcatel-Lucent Nokia® transceiver. This easy to install, hot swappable transceiver has been programmed, uniquely serialized and data-traffic and application tested to ensure that it will initialize and perform identically. Digital optical monitoring (DOM) support is also present to allow access to real-time operating parameters. This transceiver is Trade Agreements Act (TAA) compliant. We stand behind the quality of our products and proudly offer a limited lifetime warranty.

AddOn's transceivers are RoHS compliant and lead-free.

TAA refers to the Trade Agreements Act (19 U.S.C. & 2501-2581), which is intended to foster fair and open international trade. TAA requires that the U.S. Government may acquire only "U.S.-made or designated country end products."

TAA COMPLIANT

Absolute Maximum Ratings

Parameter	Symbol	Min.	Max.	Unit
Maximum Supply Voltage	Vcc	0	3.6	V
Storage Temperature	TS	-40	85	°C
Operating Case Temperature	Tc	0	70	°C
Relative Humidity (No Condensation)	RH	0	85	%
Damage Threshold	THd	0		dBm
Link Distance	D		40	km

Electrical Characteristics

Parameter	Symbol	Min.	Typ.	Max.	Unit	Notes
Supply Voltage	Vcc	3.135	3.3	3.465	V	
Supply Current	Icc			1.66	A	
Power Consumption	P_{DISS}		4.5	5.5	W	
Transmitter High-Speed Electrical Characteristics						
Signaling Rate	Rate	25.78125 ± 100ppm			Gbps	
Input Differential Impedance	ZIN		100		Ω	
Differential Input Voltage Per Lane				900	mV	
Input Impedance Mismatch				10	%	
Input High Voltage	VIH	2		Vcc+0.3	V	
Input Low Voltage	VIL	-0.3		0.8	V	
Receiver High-Speed Electrical Characteristics						
Signaling Rate	Rate	25.78125 ± 100ppm			Gbps	
Common-Mode Voltage	Vcm	-350		2850	mV	
Common-Mode Noise (RMS)				17.5	mV	
Differential Termination Resistance Mismatch (At 1MHz)				10	%	
Differential Return Loss (SDD22)				Per CEI-28G-VSR	dB	
Common-Mode to Differential Conversion and Differential to Common-Mode Conversion (SDC22, SCD22)				Per CEI-28G-VSR	dB	
Common-Mode Return Loss (SCC22): From 250MHz to 30GHz				-2		
Transition Time: 20-80%		9.5			ps	
Vertical Eye Closure	VEC			6.5	dB	
Eye Width at 10-15 Probability	EW15	0.57			UI	
Eye Height at 10-15 Probability	EH15	228			mV	

Optical Characteristics (EOL)

Parameter		Symbol	Min.	Typ.	Max.	Unit	Notes
Transmitter							
Data Rate Per Lane			53.125 ± 100ppm			Gbps	
Modulation Format			PAM4				
Wavelength		λ	1308.09	1309.09	1310.19	nm	
Side-Mode Suppression Ratio		SMSR	30			dB	
Average Launch Power		Pavg	1.7		7.1	dBm	1
Outer Optical Modulation Amplitude (OMAouter)	**TDP<1.4dB**	POMA	4.7		7.9	dBm	
	TDP>1.4dB		3.3+TDP				
Transmitter and Dispersion Penalty		TDP			3.9	dB	
TECQ		TECQ			3.9	dB	
|TDP-TECQ|(Maximum)					2.7	dB	
Extinction Ratio		ER	5.0			dB	
Optical Return Loss Tolerance		ORLT			15	dB	
Transmitter Reflectance		RL			-26	dB	2
Average Launch Power Off Transmitter		Poff			-15	dBm	
RIN15.6 OMA		RIN			-136	dB/Hz	
Receiver							
Data Rate Per Lane			53.125 ± 100ppm			Gbps	
Modulation Format			PAM4				
Lane Wavelength		λ	1304.5~1317.5			nm	
Damage Threshold		THd	-2.4			dBm	3
Average Receive Power			-16		-3.4	dBm	4
Receive Power (OMAouter)					-2.6	dBm	
Receiver Reflectance		RL			-26	dB	
Receiver Sensitivity (OMAouter)	**TECQ<1.4 dB**				-13.8	dBm	
	TECQ>1.4 dB				TECQ-15.2		
Stressed Receiver Sensitivity (OMAouter) Per Lane - Maximum		SRS			-11.3	dBm	5
LOS Assert		LOSA	-30		-19.5	dBm	
LOS De-Assert		LOSD			-16.5	dBm	
LOS Hysteresis		LOSH	0.5			dB	
Conditions of Stress Receiver Sensitivity Test							
Stressed Eye Closure for PAM4 (SECQ) Lane Under Test					3.9	dB	

Notes:

1. Average launch power (minimum) is informative and not the principal indicator of signal strength. A

transmitter with launch power below this value cannot be compliant; however, a value above this does not ensure compliance.

2. Transmitter Reflectance is defined looking into the transmitter.
3. The receiver shall be able to tolerate, without damage, continuous exposure to a modulated optical input signal having this power level on one lane.
4. Average receive power (minimum) is informative and not the principal indicator of signal strength. A received power below this value cannot be compliant; however, a value above this does not ensure compliance.
5. Measured with a conformance test signal at TP3 for the BER specified in IEEE Std 802.3cd.

Pin Descriptions

Pin	Symbol	Name/Descriptions	Ref.
1	GND	Transmitter Ground (Common with Receiver Ground).	1
2	Tx2-	Transmitter Inverted Data Input.	
3	Tx2+	Transmitter Non-Inverted Data Output.	
4	GND	Transmitter Ground (Common with Receiver Ground).	1
5	Tx4-	Transmitter Inverted Data Input.	
6	Tx4+	Transmitter Non-Inverted Data Output.	
7	GND	Transmitter Ground (Common with Receiver Ground).	1
8	ModSelL	Module Select.	2
9	ResetL	Module Reset.	2
10	VccRx	+3.3V Power Supply Receiver.	
11	SCL	2-Wire Serial Interface Clock.	2
12	SDA	2-Wire Serial Interface Data.	2
13	GND	Transmitter Ground (Common with Receiver Ground).	1
14	Rx3+	Receiver Non-Inverted Data Output.	
15	Rx3-	Receiver Inverted Data Output.	
16	GND	Transmitter Ground (Common with Receiver Ground).	1
17	Rx1+	Receiver Non-Inverted Data Output.	
18	Rx1-	Receiver Inverted Data Output.	
19	GND	Transmitter Ground (Common with Receiver Ground).	1
20	GND	Transmitter Ground (Common with Receiver Ground).	1
21	Rx2-	Receiver Inverted Data Output.	
22	Rx2+	Receiver Non-Inverted Data Output.	
23	GND	Transmitter Ground (Common with Receiver Ground).	1
24	Rx4-	Receiver Inverted Data Output.	1
25	Rx4+	Receiver Non-Inverted Data Output.	
26	GND	Transmitter Ground (Common with Receiver Ground).	1
27	ModPrsl	Module Present.	
28	IntL	Interrupt.	2
29	VccTx	+3.3V Power Supply Transmitter.	
30	Vcc1	+3.3V Power Supply.	
31	LPMode	Low-Power Mode.	2
32	GND	Transmitter Ground (Common with Receiver Ground).	1
33	Tx3+	Transmitter Non-Inverted Data Input.	
34	Tx3-	Transmitter Inverted Data Output.	
35	GND	Transmitter Ground (Common with Receiver Ground).	1
36	Tx1+	Transmitter Non-Inverted Data Input.	

37	Tx1-	Transmitter Inverted Data Output.	
38	GND	Transmitter Ground (Common with Receiver Ground).	1

Notes:

1. The module signal grounds are isolated from the module case.
2. This is an open collector/drain output that, on the host board, requires a 4.7KΩ to 10KΩ pull-up resistor to Host_Vcc.

Electrical Pin-Out Details

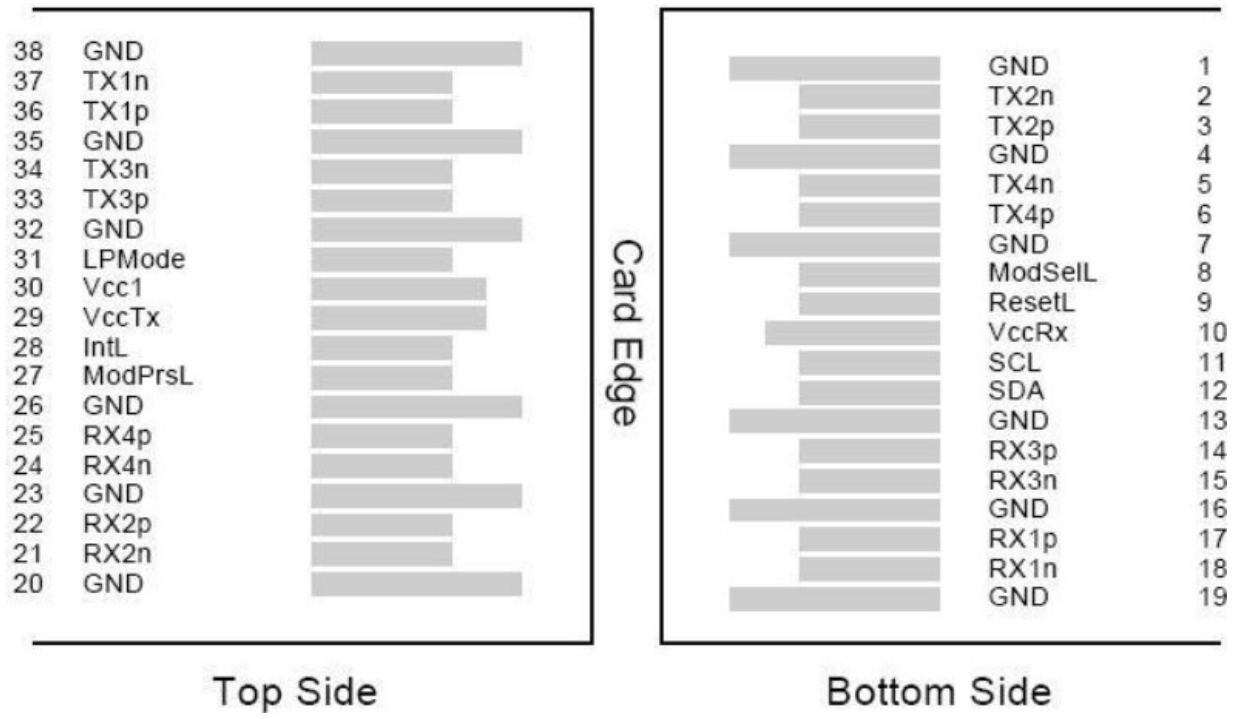

Recommended Power Supply Filter Network

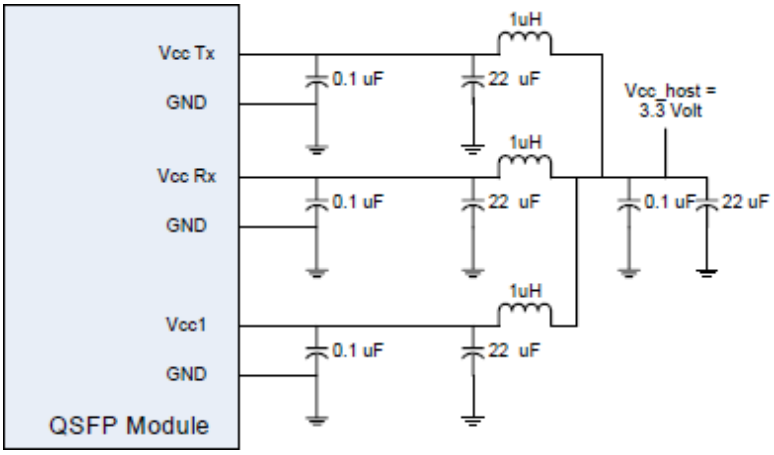

Block Diagram

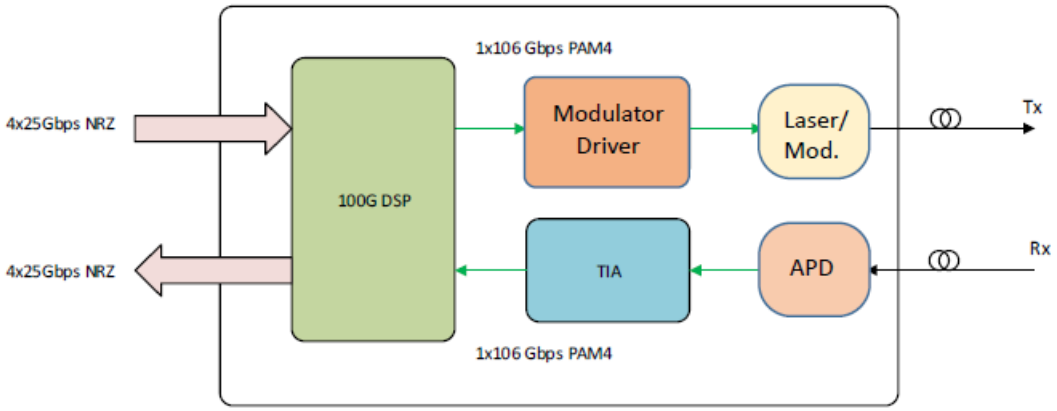

Mechanical Specifications

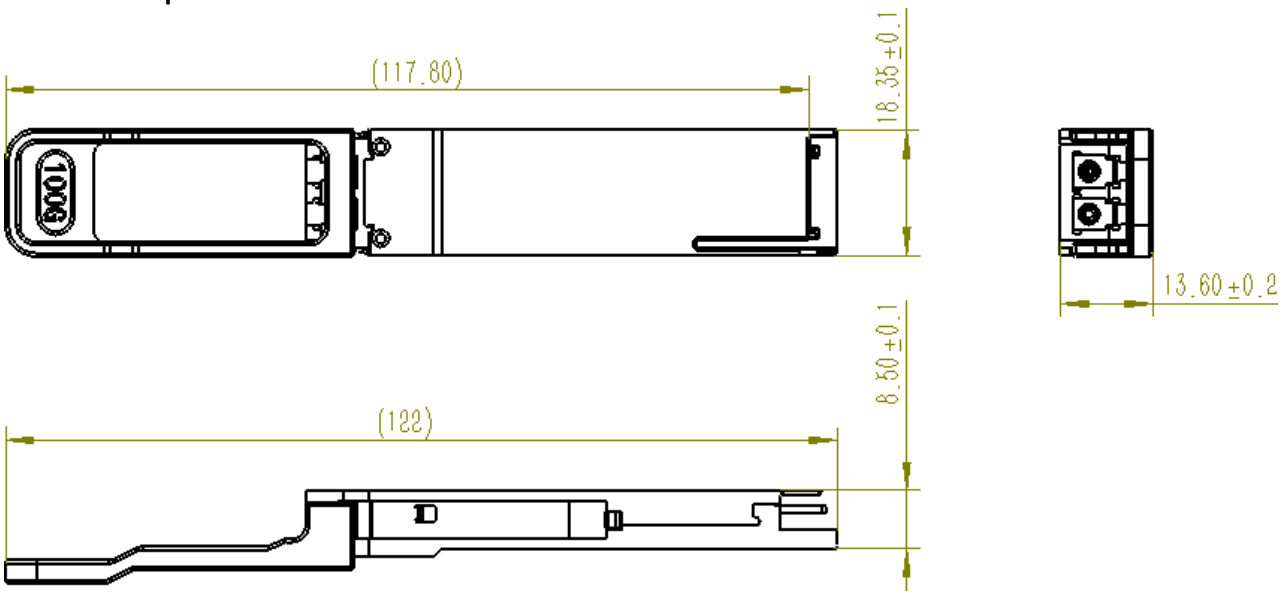

Digital Diagnostics

Parameter	Symbol	Min.	Max.	Unit	Notes
Temperature Monitor Absolute Error	DMI_Temp	-3	3	ºC	Over operating temperature range
Supply Voltage Monitor Absolute Error	DMI_Vcc	-0.1	0.1	V	Over full operating range
Channel Rx Power Monitor Absolute Error	DMI_Rx_Ch	-3	3	dB	1
Channel Bias Current Monitor	DMI_Ibias_Ch	-10%	10%	mA	
Channel Tx Power Monitor Absolute Error	DMI_Tx_Ch	-3	3	dB	1

Notes:

1. Due to the measurement accuracy of different single-mode fibers, there could be an additional ±1dB fluctuation or a ±3dB total accuracy.

About AddOn Networks

In 1999, AddOn Networks entered the market with a single product. Our founders fulfilled a severe shortage for compatible, cost-effective optical transceivers that compete at the same performance levels as leading OEM manufacturers. Adhering to the idea of redefining service and product quality not previously had in the fiber optic networking industry, AddOn invested resources in solution design, production, fulfillment, and global support.

Combining one of the most extensive and stringent testing processes in the industry, an exceptional free tech support center, and a consistent roll-out of innovative technologies, AddOn has continually set industry standards of quality and reliability throughout its history.

Reliability is the cornerstone of any optical fiber network and is ingrained in AddOn's DNA. It has played a key role in nurturing the long-term relationships developed over the years with customers. AddOn remains committed to exceeding industry standards with certifications ranging from NEBS Level 3 to ISO 9001:2015 with every new development while maintaining the signature reliability of its products.



U.S. Headquarters

Email: sales@addonnetworks.com

Telephone: +1 877.292.1701

Fax: 949.266.9273

Europe Headquarters

Email: salesemea@addonnetworks.com

Telephone: +44 1285 842070