474902A.101-AO

Alcatel-Lucent Nokia® 474902A.101 Compatible TAA 10/25GBase-LR SFP28 Transceiver Low Power Rate Selectable (SMF, 1310nm, 10km, LC, DOM, -40 to 85C)

Features:

- Up to 10km Transmission Distance
- Low Power Consumption: 1.2W
- Duplex LC Connector
- Digital Monitoring SFF-8472 Compliant
- Operating Temperature: -40 to 85 Celsius
- Single 3.3V, 5% Power Supply
- RoHS Compliant and Lead-Free



Applications:

- 25GBase Ethernet
- Access and Enterprise

Product Description

This Alcatel-Lucent Nokia® FTLF1436W4BTV compatible rate selectable SFP28 transceiver provides 10/25GBase-LR throughput up to 10km over single-mode fiber (SMF) using a wavelength of 1310nm via an LC connector. It is capable of withstanding rugged environments and can operate at temperatures between -40 and 85C. Our transceiver is built to meet or exceed OEM specifications and is guaranteed to be 100% compatible with Alcatel-Lucent Nokia®. It has been programmed, uniquely serialized, and tested for data-traffic and application to ensure that it will initialize and perform identically. All of our transceivers comply with Multi-Source Agreement (MSA) standards to provide seamless network integration. Additional product features include Digital Optical Monitoring (DOM) support which allows access to real-time operating parameters. This transceiver is Trade Agreements Act (TAA) compliant. We stand behind the quality of our products and proudly offer a limited lifetime warranty.

AddOn's transceivers are RoHS compliant and lead-free.

TAA refers to the Trade Agreements Act (19 U.S.C. & 2501-2581), which is intended to foster fair and open international trade. TAA requires that the U.S. Government may acquire only "U.S.-made or designated country end products."

TAA COMPLIANT

Absolute Maximum Ratings

Parameter	Symbol	Min.	Typ.	Max.	Unit	Notes
Storage Temperature	Tstg	-40		85	℃	
Operating Case Temperature	Tc	-40		85	℃	
Power Supply Voltage	Vcc	-0.3		4.0	V	
Relative Humidity	RH	0		95	%	
Bit Rate	BR		25.78		Gbps	
Maximum Supported Link Length	L			10	km	

Electrical Characteristics

Parameter	Symbol	Min.	Typ.	Max.	Unit	Notes
Supply Voltage	Vcc	3.14	3.3	3.46	V	
Supply Current	Icc		300		mA	
Transmitter						
Input Differential Impedance	RIN	80	100	120	Ω	
Single-Ended Data Input Swing	VIN	90		500	mVp-p	
Transmit Disable Voltage	VDIS	2		Host_Vcc	V	
Transmit Enable Voltage	VEN	Vee		Vee+0.8	V	
Transmit Fault Assert Voltage	VFA	2.2		Host_Vcc	V	
Transmit Fault De-Assert Voltage	VFDA	Vee		Vee+0.4	V	
Receiver						
Single-Ended Data Output Swing	VOD	200		500	mVp-p	
LOS Fault	VLOSFT	2.2		Host_Vcc	V	
LOS Normal	VLOSNR	Vee		Vee+0.4	V	

Optical Characteristics

Parameter	Symbol	Min.	Typ.	Max.	Unit	Notes
Transmitter						
Nominal Wavelength	λ	1295	1310	1325	nm	
Side-Mode Suppression Ratio	SMSR	30			dB	
Optical Modulation Amplitude	POMA	-4			dBm	
Optical Output Power	Pavg	-4.5		2	dBm	
Extinction Ratio	ER	3.5			dB	
Transmitter and Dispersion Penalty	TDP			2.7	dB	
Average Launch Power of Off Transmitter	Poff			-30	dBm	
Receiver						
Center Wavelength	λ	1260	1310	1360	nm	
Overload				2	dBm	
Receiver Sensitivity (Average)	RSENSE1			-11.4	dBm	1
LOS Assert	LOSA	-30			dBm	
LOS De-Assert	LOSD			-17	dBm	
LOS Hysteresis		0.5			dB	

Notes:

1. Sensitivity for 25.78Gbps PRBS 2^{31}-1 and BER better than or equal to $10E^{-12}$ and ER=4.8dB.

Pin Descriptions

Pin	Logic	Symbol	Name/Description	Notes
1		VeeT	Connected to the signal ground on the host board.	
2	LVTTL Output	Tx_Fault	Module transmitter fault output.	
3	LVTTL Input	Tx_Disable	Module transmitter disable control.	
4	LVTTL Input/Output	SDA	2-wire serial interface data.	
5	LVTTL Input/Output	SCL	2-wire serial interface clock.	
6		MOD_ABS	Module absent (connected to the module ground).	
7	LVTTL Input	RS0	Rate select 0 (rx): low=cdr bypass, high=cdr select.	
8	LVTTL Output	LOS	Receiver loss of signal.	
9	LVTTL Input	RS1	Rate select 1 (tx): low=cdr bypass, high=cdr select.	
10		VeeR	Connected to the signal ground on the host board.	
11		VeeR	Connected to the signal ground on the host board.	
12	CML Output	RD-	Receiver inverted data output, internally AC coupled and terminated.	
13	CML Output	RD+	Receiver non-inverted data output, internally AC coupled and terminated.	
14		VeeR	Connected to the signal ground on the host board.	
15		VccR	Receiver power 3.3V supply.	
16		VccT	Transmitter power 3.3V supply.	
17		VeeT	Connected to the signal ground on the host board.	
18	CML Input	TD+	Transmitter non-inverted data input, internally AC coupled and terminated.	
19	CML Input	TD-	Transmitter inverted data input, internally AC coupled and terminated.	
20		VeeT	Connected to the signal ground on the host board.	

Pin-Out Details

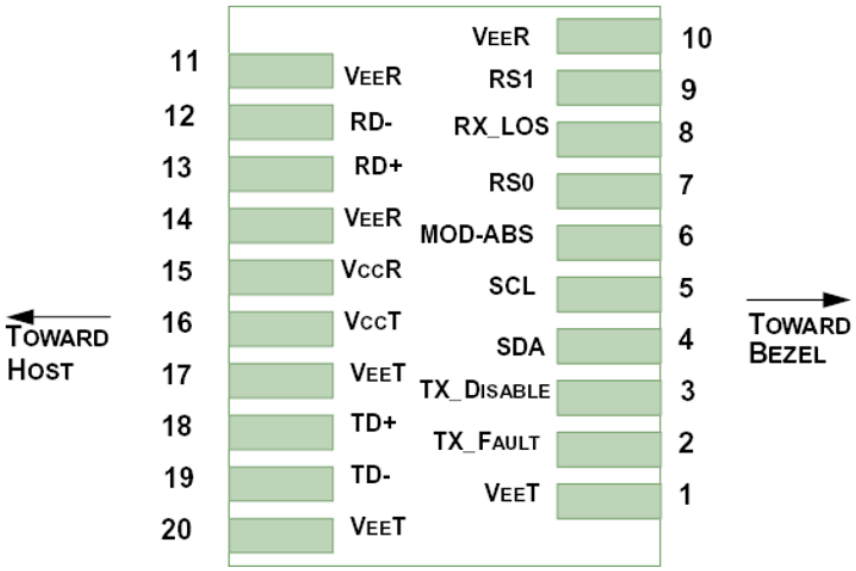

Block Diagram

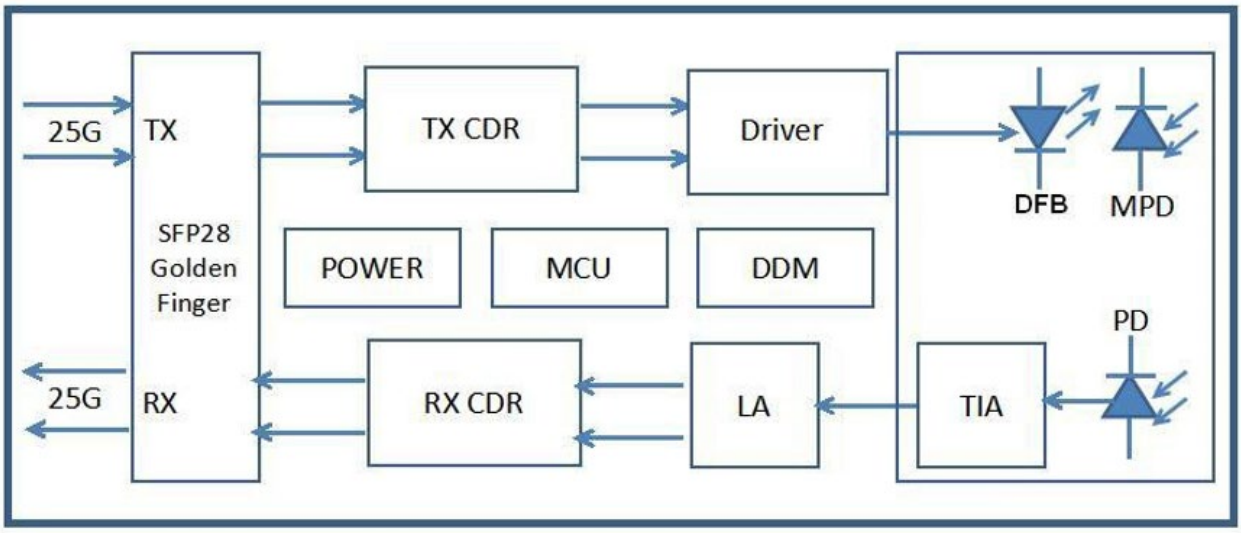

Loopback Control

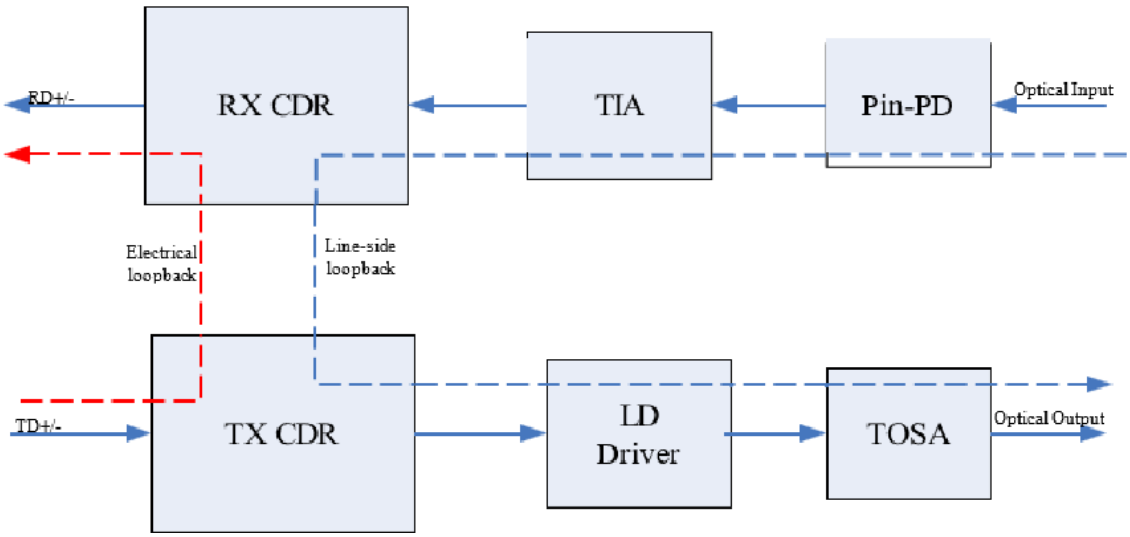

Mechanical Specifications

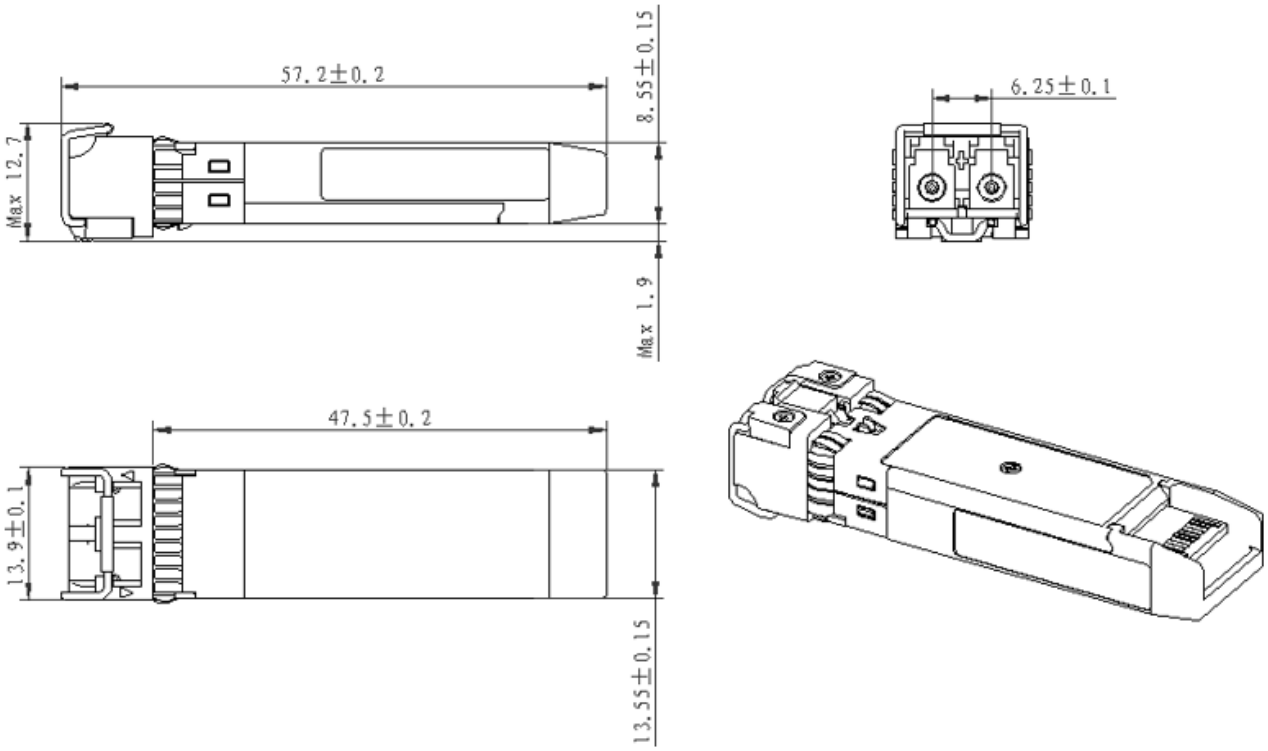

About AddOn Networks

In 1999, AddOn Networks entered the market with a single product. Our founders fulfilled a severe shortage for compatible, cost-effective optical transceivers that compete at the same performance levels as leading OEM manufacturers. Adhering to the idea of redefining service and product quality not previously had in the fiber optic networking industry, AddOn invested resources in solution design, production, fulfillment, and global support.

Combining one of the most extensive and stringent testing processes in the industry, an exceptional free tech support center, and a consistent roll-out of innovative technologies, AddOn has continually set industry standards of quality and reliability throughout its history.

Reliability is the cornerstone of any optical fiber network and is ingrained in AddOn's DNA. It has played a key role in nurturing the long-term relationships developed over the years with customers. AddOn remains committed to exceeding industry standards with certifications ranging from NEBS Level 3 to ISO 9001:2015 with every new development while maintaining the signature reliability of its products.



U.S. Headquarters

Email: sales@addonnetworks.com

Telephone: +1 877.292.1701

Fax: 949.266.9273

Europe Headquarters

Email: salesemea@addonnetworks.com

Telephone: +44 1285 842070