**SFP-1GB-CW-43-40-N1-AO**

Alcatel-Lucent Nokia® Compatible TAA 1000Base-CWDM SFP Transceiver (SMF, 1430nm, 40km, LC, DOM)

**Features:**

- INF-8074 and SFF-8472 Compliance
- Duplex LC Connector
- Commercial Temperature 0 to 70 Celsius
- Single-mode Fiber
- Hot Pluggable
- Excellent ESD Protection
- Metal with Lower EMI
- RoHS Compliant and Lead Free



**Applications:**

- 1x Fibre Channel
- Gigabit Ethernet over CWDM
- Access, Metro and Enterprise

**Product Description**

This Alcatel-Lucent Nokia® compatible SFP transceiver provides 1000Base-CWDM throughput up to 40km over single-mode fiber (SMF) using a wavelength of 1430nm via an LC connector. It can operate at temperatures between 0 and 70C. The listed reach has been determined using a link budget calculation and tested in a standard environment. Actual link distances achieved will be dependent upon the deployed environment. Our transceiver is built to meet or exceed OEM specifications and is guaranteed to be 100% compatible with Alcatel-Lucent Nokia®. It has been programmed, uniquely serialized, and tested for data-traffic and application to ensure that it will initialize and perform identically. All of our transceivers comply with Multi-Source Agreement (MSA) standards to provide seamless network integration. This transceiver is Trade Agreements Act (TAA) compliant. We stand behind the quality of our products and proudly offer a limited lifetime warranty.

AddOn's transceivers are RoHS compliant and lead-free.

TAA refers to the Trade Agreements Act (19 U.S.C. & 2501-2581), which is intended to foster fair and open international trade. TAA requires that the U.S. Government may acquire only "U.S.-made or designated country end products."

TAA COMPLIANT

**Regulatory Compliance**

- ESD to the Electrical PINs: compatible with MIL-STD-883E Method 3015.4
- ESD to the LC Receptacle: compatible with IEC 61000-4-3
- EMI/EMC compatible with FCC Part 15 Subpart B Rules, EN55022:2010
- Laser Eye Safety compatible with FDA 21CFR, EN60950-1& EN (IEC) 60825-1,2
- RoHS compliant with EU RoHS 2.0 directive 2015/863/EU

**Absolute Maximum Ratings**

| Parameter | Symbol | Min. | Typical | Max. | Unit |
|---|---|---|---|---|---|
| **Maximum Supply Voltage** | Vcc | -0.5 | | 4.0 | V |
| **Storage Temperature** | TS | -40 | | 85 | °C |
| **Operating Case Temperature** | Tc | 0 | 25 | 70 | °C |
| **Operating Humidity** | RH | 5 | | 95 | % |
| **Data Rate** | | | 1.25<br>1.0625 | | Gb/s |

**Electrical Characteristics** (TOP=25°C, Vcc=3.3 Volts)

| Parameter | Symbol | Min. | Typ. | Max. | Unit | Notes |
|---|---|---|---|---|---|---|
| **Power Supply Voltage** | Vcc | 3.135 | 3.30 | 3.465 | V | |
| **Power Supply Current** | Icc | | | 300 | mA | |
| **Power Dissipation** | $P_D$ | | | 1000 | mW | |
| **Transmitter** | | | | | | |
| **Differential data input voltage (TD +/-)** | | 300 | | 2200 | $mV_{P-P}$ | 1 |
| **Low speed output: Transmitter Fault (TX_FAULT) / Loss of Signal (LOS)** | VOH | 2.0 | | Vcc | V | 3 |
| | VOL | 0 | | 0.8 | V | |
| **Low speed input: Transmitter Disable (TX_DISABLE), MOD_DEF 1, MOD_DEF 2** | VIH | 2.0 | | Vcc | V | 4 |
| | VIL | 0 | | 0.8 | V | |
| **Receiver** | | | | | | |
| **Differential data output voltage (RD +/-)** | | 600 | | 1200 | $mV_{P-P}$ | 2 |

**Notes**

1. Internally AC coupled and terminated to 100Ω differential load.
2. Internally AC coupled, but requires a 100Ω differential termination or internal to Serializer/Deserializer.
3. Pulled up externally with a 4.7KΩ-10KΩ resistor on the host board to VCCT,R.
4. Mod_Def1 and Mod_Def2 must be pulled up externally with a 4.7KΩ-10KΩ resistor on the host board to VCCT,R.

**Optical Characteristics**

| Parameter | Symbol | Min. | Typ. | Max. | Unit | Notes |
|---|---|---|---|---|---|---|
| **Transmitter** | | | | | | |
| **Launch Optical Power** | Po | -5 | | +5 | dBm | |
| **Center Wavelength Range** | λc | λ-6.5 | λ | λ+6.5 | nm | 1 |
| **Extinction Ratio** | EX | 9 | | | dB | |
| **Spectral Width (-20dB)** | Δλ | | | 1 | nm | |
| **Side Mode Suppression Ratio** | SMSR | 30 | | | dB | |
| **Total Jitter** | TJ | | | 266 | ps | |
| **Dispersion Penalty** | | | | 1 | dB | |
| **Optical Rise/ Fall Time** | $T_{rise}/T_{fall}$ | | | 260 | ps | |
| **Pout @TX-Disable Asserted** | $P_{off}$ | | | -45 | dBm | |
| **Eye Diagram** | IEEE Std 802.3-2005 Gigabit Ethernet 1000Base-LX compatible | | | | | |
| **Receiver** | | | | | | |
| **Receiver Sensitivity** | S | | | -24 | dBm | 2 |
| **Receiver overload** | $P_{OL}$ | -3 | | | dBm | |
| **Optical Return Loss** | ORL | 12 | | | dB | |
| **LOS De-Assert** | $LOS_D$ | | | -25 | dBm | |
| **LOS Assert** | $LOS_A$ | -35 | | | dBm | |
| **LOS Hysteresis** | | 0.5 | 3 | 5 | dB | |

**Notes:**

1. The CWDM Transmitter Center Wavelengths "λ" are: 1270, 1290, 1310, 1330, 1350, 1370, 1390, 1410, 1430, 1450, 1470, 1490, 1510, 1530, 1550, 1570, 1590 and 1610nm. 1270 to 1450nm are named herein as O-band wavelength and 1470 to 1610nm as L-band wavelength generally.
2. Measured with PRBS $2^7$-1 test pattern, 1.25Gb/s, EX=9dB, BER<$10^{-12}$.

## Timing Characteristics

| Parameter | Symbol | Min. | Typ. | Max. | Unit | Notes |
|---|---|---|---|---|---|---|
| **Tx_disable assert time** | T_off | | | 10 | us | |
| **Tx_disable negate time** | T_on | | | 1 | ms | |
| **Time to initialize, include reset of TX_FAULT** | T_init | | | 300 | ms | |
| **TX_FAULT from fault to assertion** | T_fault | | | 100 | us | |
| **Tx_disable time to start reset** | T_reset | 10 | | | us | |
| **Receiver LOS Assert Time (on to off)** | T_D,RX_LOS | | | 80 | us | |
| **Receiver LOS Assert Time (off to on)** | T_A,RX_LOS | | | 80 | us | |
| **Serial I2C Clock Rate** | I2C_Clock | | | 100 | kHz | |

## Pin Descriptions

| Pin | Symbol | Name/Descriptions | Engagement order | Ref. |
|---|---|---|---|---|
| **1** | VeeT | Transmitter Ground | 1 | |
| **2** | TX Fault | Transmitter Fault Indication | 3 | 1 |
| **3** | TX Disable | Transmitter Disable-Module disables on high or open | 3 | 2 |
| **4** | MOD-DEF2 | Module Definition 2-Two wire serial ID interface | 3 | 3 |
| **5** | MOD-DEF1 | Module Definition 1-Two wire serial ID interface | 3 | 3 |
| **6** | MOD-DEF0 | Module Definition 0-Grounded in module | 3 | 3 |
| **7** | Rate Select | Not Connected | 3 | |
| **8** | LOS | Loss of Signal | 3 | 4 |
| **9** | VeeR | Receiver Ground | 1 | |
| **10** | VeeR | Receiver Ground | 1 | |
| **11** | VeeR | Receiver Ground | 1 | |
| **12** | RD- | Inverse Received Data out | 3 | 5 |
| **13** | RD+ | Received Data out | 3 | 5 |
| **14** | VeeR | Receiver Ground | 1 | |
| **15** | VccR | Receiver Power - +3.3V±5% | 2 | 6 |
| **16** | VccT | Transmitter Power - +3.3 V±5% | 2 | 6 |
| **17** | VeeT | Transmitter Ground | 1 | |
| **18** | TD+ | Transmitter Data In | 3 | 7 |
| **19** | TD- | Inverse Transmitter Data In | 3 | 7 |
| **20** | VeeT | Transmitter Ground | 1 | |

**Notes:**

1. TX Fault is open collector/drain output which should be pulled up externally with a 4.7KΩ-10KΩ resistor on the host board to supply < VccT +0.3V or VccR + 0.3V. When high, this output indicates a laser fault of some kind. Low indicates normal operation. In the low state, the output will be pulled to <0.8V.
2. TX Disable input is used to shut down the laser output per the state table below. It is pulled up within the module with a 4.7KΩ-10KΩ resistor.

   | | |
   |---|---|
   | Low (0-0.8V): | Transmitter on |
   | Between (0.8V and 2V): | Undefined |
   | High (2.0-VccT): | Transmitter Disabled |
   | Open: | Transmitter Disabled |

3. Mod-Def 0, 1, 2. These are the module definition pins. They should be pulled up with a 4.7KΩ-10KΩ resistor on the host board to supply less than VccT+0.3V or VccR+0.3V.
   Mod-Def 0 is grounded by the module to indicate that the module is present.
   Mod-Def 1 is clock line of two wire serial interface for optional serial ID.
   Mod-Def 2 is data line of two wire serial interface for optional serial ID.
4. LOS (Loss of signal) is an open collector/drain output which should be pulled up externally with a 4.7KΩ-10KΩ resistor on the host board to supply <VccT+0.3V or VccR+0.3V. When high, this output indicates the received optical power is below the worst case receiver sensitivity (as defined by the standard in use). Low indicates normal operation. In the low state, the output will be pulled to <0.8V.
5. RD-/+: These are the differential receiver outputs. They are AC coupled 100Ω differential lines which should be terminated with 100Ω differential at the user SERDES. The AC coupling is done inside the module and thus not required on the host board.
6. VccR and VccT are the receiver and transmitter power supplies. They are defined as 3.3V±5% at the SFP connector pin. The in-rush current will typically be no more than 30mA above steady state supply current after 500ns.
7. TD -/+: These are the differential transmitter inputs. They are AC coupled differential lines with 100Ω differential termination inside the module. The AC coupling is done inside the module and is thus not required on host board.

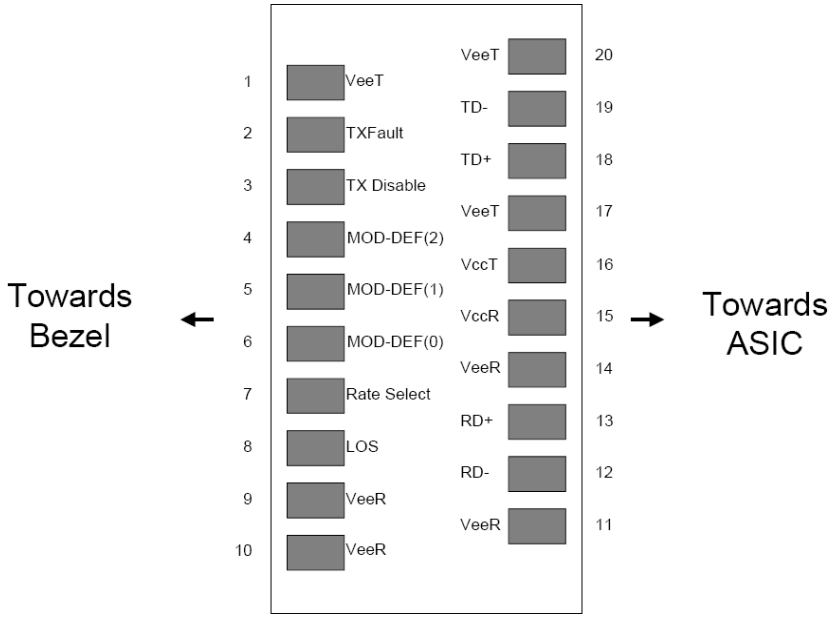


Pin-out of connector Block on Host board

**Digital Diagnostic Memory Map**

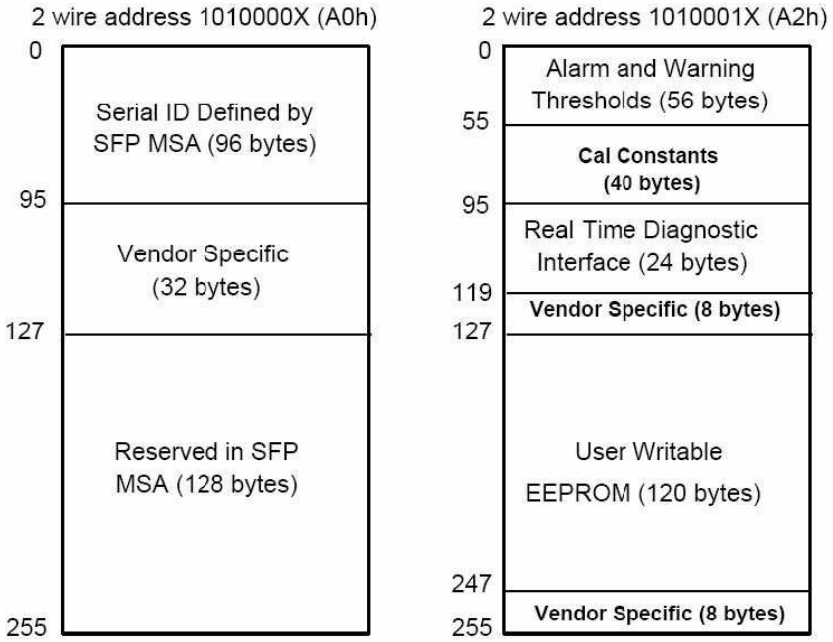

**Required Host Board Components**

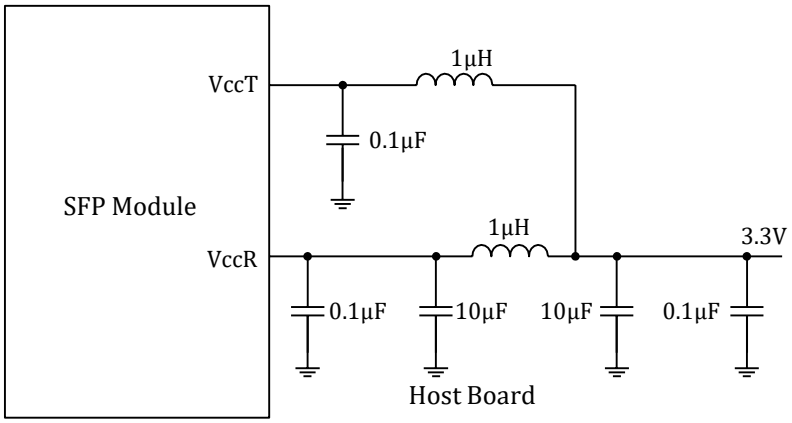


**Recommended Application Interface Circuit**

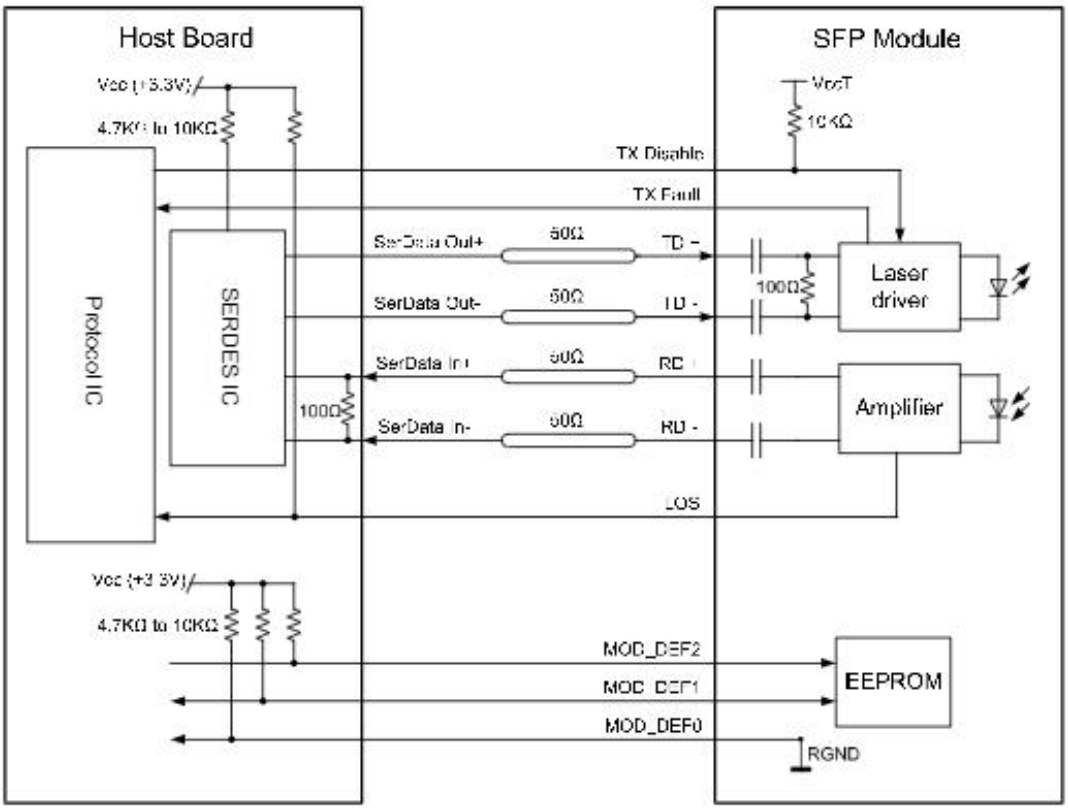

**Mechanical Specifications**

Small Form Factor Pluggable (SFP) transceivers are compatible with the dimensions defined by the SFP Multi-Sourcing Agreement (MSA).

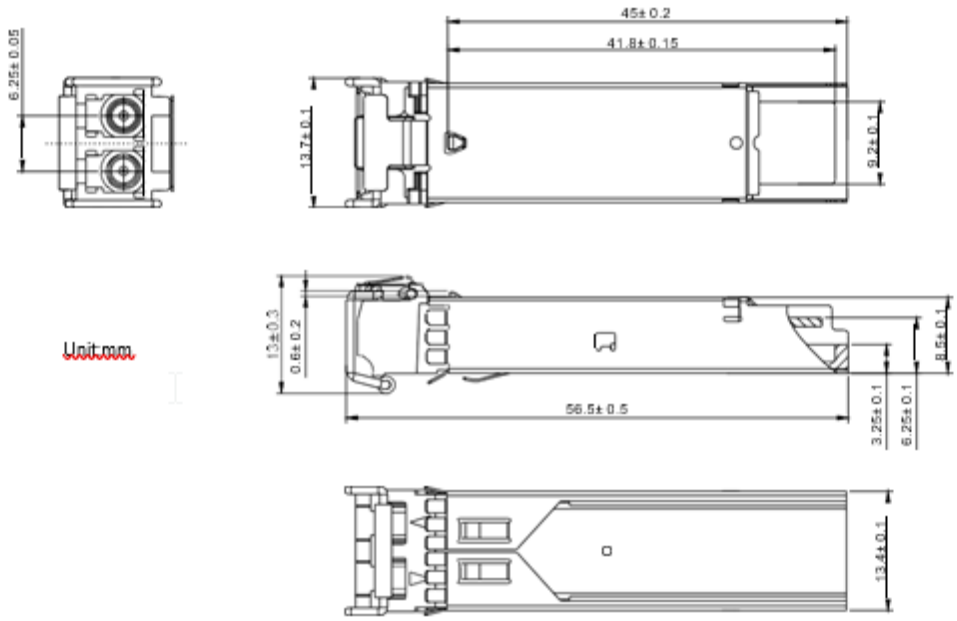

**About AddOn Networks**

In 1999, AddOn Networks entered the market with a single product. Our founders fulfilled a severe shortage for compatible, cost-effective optical transceivers that compete at the same performance levels as leading OEM manufacturers. Adhering to the idea of redefining service and product quality not previously had in the fiber optic networking industry, AddOn invested resources in solution design, production, fulfillment, and global support.

Combining one of the most extensive and stringent testing processes in the industry, an exceptional free tech support center, and a consistent roll-out of innovative technologies, AddOn has continually set industry standards of quality and reliability throughout its history.

Reliability is the cornerstone of any optical fiber network and is ingrained in AddOn's DNA. It has played a key role in nurturing the long-term relationships developed over the years with customers. AddOn remains committed to exceeding industry standards with certifications ranging from NEBS Level 3 to ISO 9001:2015 with every new development while maintaining the signature reliability of its products.




**U.S. Headquarters**

Email: sales@addonnetworks.com

Telephone: +1 877.292.1701

Fax: 949.266.9273

**Europe Headquarters**

Email: salesemea@addonnetworks.com

Telephone: +44 1285 842070