SFP-25G-C1M-AO

Alcatel-Lucent Nokia® SFP-25G-C1M Compatible TAA 25GBase-CU SFP28 Direct Attach Cable (Passive Twinax, 1m)

Features:

- Up to 25Gbps bi-directional data links
- Hot-pluggable
- Compliant with SFF-8402
- 100 Ohm differential impedance
- Enhanced EMI design
- AC coupled inputs and outputs
- Operating Temperature: 0 to 70 Celsius
- Single power supply 3.3V
- RoHS Compliant and Lead-Free

Applications:

- 25GBase Ethernet

Product Description

This is an Alcatel-Lucent Nokia® compatible 25GBase-CU SFP28 to SFP28 direct attach cable that operates over passive copper with a maximum reach of 1.0m (3.3ft). It has been programmed, uniquely serialized, and data-traffic and application tested to ensure it is 100% compliant and functional. This direct attach cable is TAA (Trade Agreements Act) compliant, and is built to comply with MSA (Multi-Source Agreement) standards. We stand behind the quality of our products and proudly offer a limited lifetime warranty.

AddOn's transceivers are RoHS compliant and lead-free.

TAA refers to the Trade Agreements Act (19 U.S.C. & 2501-2581), which is intended to foster fair and open international trade. TAA requires that the U.S. Government may acquire only "U.S.-made or designated country end products."

Rev. 090226

General Specifications

Parameter	Symbol	Min.	Typ.	Max.	Unit	Notes
Data Rate	DR		25		Gbps	1
Bit Error Rate	BER			10^{-12}		
Operating Temperature	Tc	0		70	ºC	2
Storage Temperature	Tstg	-40		85	ºC	3
Supply Current	Icc			4	mA	4
Input Voltage	Vcc	3.14	3.3	3.46	V	4
Cable Impedance	Z	90	100	110	Ω	
Product Weight	GD		78		g/PCS	5
Cable Weight	GC		32		G/M	
Dust Cap Weight	GS		0.80		g/PCS	

Notes:

1. IEEE 802.3by.
2. Case temperature.
3. Ambient temperature.
4. For electrical power interface.

Cable Dimensions and Insertion Loss Level

Length	Standard Wire Gauge AWG	Cable Diameter OD (mm)	Minimum Bending Radius R (mm)	Insertion Loss Level (Note 1)	Tolerance Range (±cm)
1m	30AWG	4.6	26	CA-25G-N	2

Notes:

1. Cable insertion loss classification standard IEEE 802.3by 110-10.

Pin Descriptions

Pin	Symbol	Name/Description	Notes
1	VeeT	Transmitter Ground (Common with Receiver Ground).	1
2	Tx_Fault	Transmitter Failure Alarm. Not Used.	
3	Tx_Disable	Not Used. The signal turns off the module transmitter when it is “high” or “open.”	
4	SDA	Data Line for Serial ID.	2
5	SCL	Clock Line for Serial ID.	2
6	MOD_ABS	Module Absent. Grounded within the module.	2
7	RS0	No Connection Required.	
8	LOS	Loss of Signal Indication. “Logic 0” indicates normal operation.	
9	RS1	No Connection Required.	
10	VeeR	Receiver Ground (Common with Transmitter Ground).	1
11	VeeR	Receiver Ground (Common with Transmitter Ground).	1
12	RD-	Receiver Inverted Data Out. AC Coupled.	
13	RD+	Receiver Non-Inverted Data Out. AC Coupled.	
14	VeeR	Receiver Ground (Common with Transmitter Ground).	1
15	VccR	Receiver Power Supply.	
16	VccT	Transmitter Power Supply.	
17	VeeT	Transmitter Ground (Common with Receiver Ground).	1
18	TD+	Transmitter Non-Inverted Data In. AC Coupled.	
19	TD-	Transmitter Inverted Data In. AC Coupled.	
20	VeeT	Transmitter Ground (Common with Receiver Ground).	1

Notes:

1. The circuit ground is isolated from the chassis ground.
2. Should be pulled up with 4.7kΩ to 10kΩ on the host board to a voltage between 2V and 3.6V.

Electrical Pad Layout

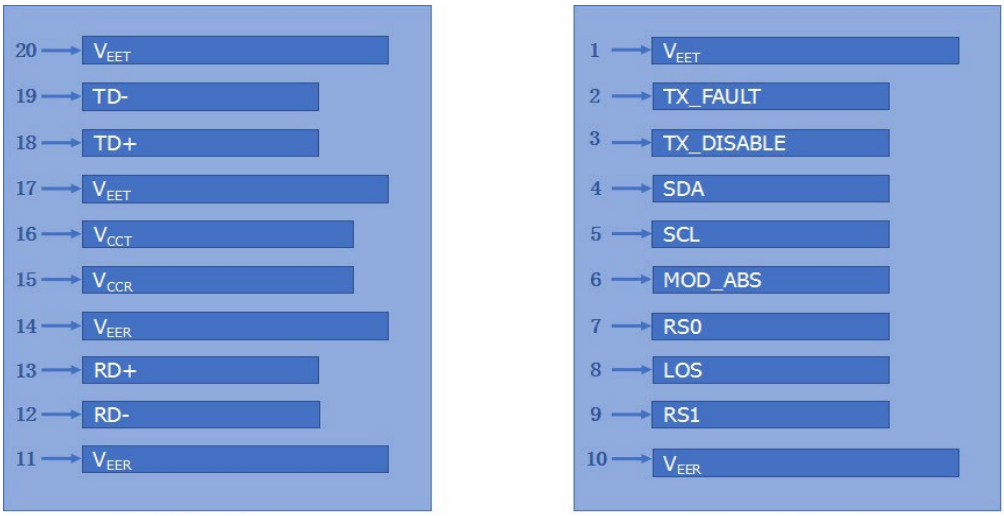

Top of Board

Bottom of Board

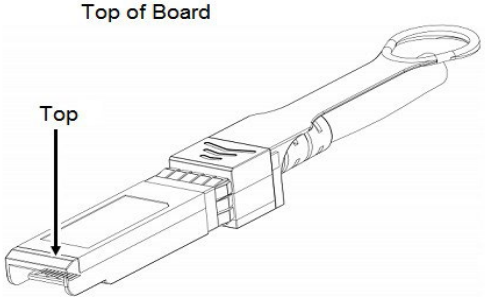

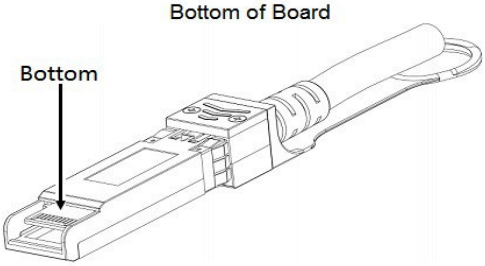

Block Diagram of Transceiver

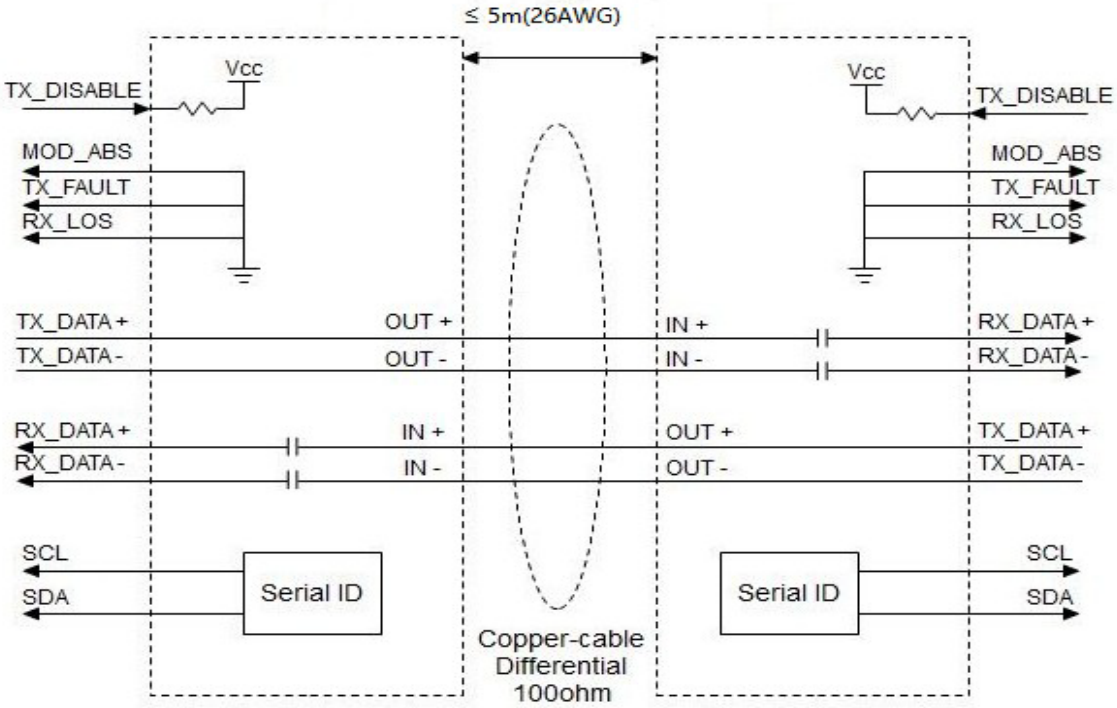

Mechanical Specifications

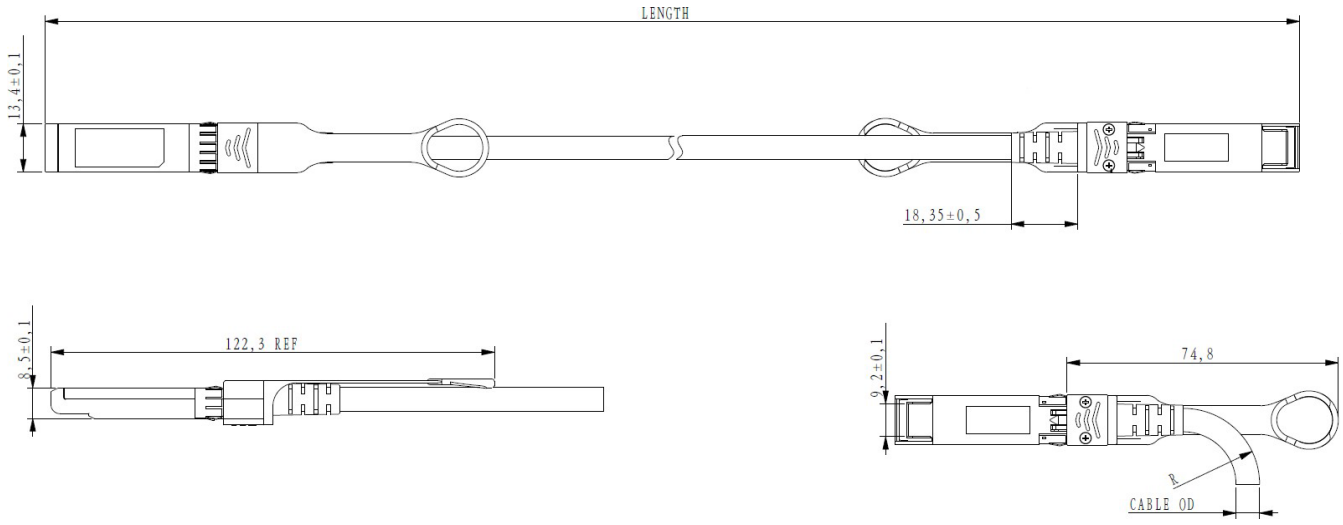

Unmarked Tolerance ±0.2
Unit: mm

About AddOn Networks

In 1999, AddOn Networks entered the market with a single product. Our founders fulfilled a severe shortage for compatible, cost-effective optical transceivers that compete at the same performance levels as leading OEM manufacturers. Adhering to the idea of redefining service and product quality not previously had in the fiber optic networking industry, AddOn invested resources in solution design, production, fulfillment, and global support.

Combining one of the most extensive and stringent testing processes in the industry, an exceptional free tech support center, and a consistent roll-out of innovative technologies, AddOn has continually set industry standards of quality and reliability throughout its history.

Reliability is the cornerstone of any optical fiber network and is ingrained in AddOn's DNA. It has played a key role in nurturing the long-term relationships developed over the years with customers. AddOn remains committed to exceeding industry standards with certifications ranging from NEBS Level 3 to ISO 9001:2015 with every new development while maintaining the signature reliability of its products.

U.S. Headquarters

Email: sales@addonnetworks.com

Telephone: +1 877.292.1701

Fax: 949.266.9273

Europe Headquarters

Email: salesemea@addonnetworks.com

Telephone: +44 1285 842070