3HE08314BA-AO

Alcatel-Lucent Nokia® 3HE08314BA Compatible TAA 1000Base-BX 2-Channel SFP Transceiver (SMF, 1490nmTx/1310nmRx, 40km, LC, DOM, -40 to 85C)

Features:

- INF-8074 and SFF-8472 Compliance
- Simplex LC Connector
- Industrial Temperature -40 to 85 Celsius
- Single-mode Fiber
- Hot Pluggable
- Excellent ESD Protection
- Metal with Lower EMI
- RoHS Compliant and Lead Free



Applications:

- 1x Fibre Channel
- 1000Base-BX Ethernet
- Access (FTTx) and Enterprise

Product Description

This Alcatel-Lucent Nokia® 3HE08314BA compatible SFP transceiver provides 1000Base-BX 2-Channel throughput up to 40km over single-mode fiber (SMF) using a wavelength of 1490nmTx/1310nmRx via an LC connector. This bidirectional unit must be used with another transceiver or network appliance of complementing wavelengths. It is capable of withstanding rugged environments and can operate at temperatures between -40 and 85C. Our transceiver is built to meet or exceed OEM specifications and is guaranteed to be 100% compatible with Alcatel-Lucent Nokia®. It has been programmed, uniquely serialized, and tested for data-traffic and application to ensure that it will initialize and perform identically. All of our transceivers comply with Multi-Source Agreement (MSA) standards to provide seamless network integration. This transceiver is Trade Agreements Act (TAA) compliant. We stand behind the quality of our products and proudly offer a limited lifetime warranty.

AddOn's transceivers are RoHS compliant and lead-free.

TAA refers to the Trade Agreements Act (19 U.S.C. & 2501-2581), which is intended to foster fair and open international trade. TAA requires that the U.S. Government may acquire only "U.S.-made or designated country end products."

TAA COMPLIANT

Absolute Maximum Ratings

Parameter		Symbol	Min.	Typ.	Max.	Unit
Maximum Supply Voltage		Vcc	-0.5		3.6	V
Storage Temperature		TS	-40		85	°C
Operating Case Temperature		Tc	-40		85	°C
Operating Relative Humidity		RH			95	%
Data Rate	**FE**			100		Mbps
	OC-3/STM-1			155		Mbps
	STM-4			622		Mbps
	FC			1063		Mbps
	GBE			1250		Mbps

Electrical Characteristics (TOP=25°C, Vcc=3.3Volts)

Parameter		Symbol	Min.	Typ.	Max.	Unit	Notes
Power Supply Voltage		Vcc	3.15	3.3	3.45	V	
Power Supply Current		Icc			300 per channel	mA	
Power Dissipation		Pd			1.5	W	
Transmitter							
LVPECL Compatible Inputs (Differential)		Vin	400		2000	mVpp	AC coupled inputs (Note 5)
Input Impedance (Differential)		Zin	85	100	115	ohm	Rin > 100kΩ @DC
TX_FAULT	**Fault**		2		Vcc+0.3	V	
	Normal		0		0.5		
TX_Dis	**Disable**		2		Vcc+0.3	V	
	Enable		0		0.8		
Receiver							
CML Outputs (Differential)		Vout	400		800	mVpp	AC coupled outputs (Note 5)
Output impedance (Differential)		Zout	85	100	115	ohm	
RX_LOS	**LOS**		2		Vcc+0.3	V	
	Normal		0		0.8	V	
MOD_DEF (0:2)		VoH	2.5			V	With Serial ID
		VoL	0		0.5	V	

Optical Characteristics

Parameter	Symbol	Min	Typ	Max	Unit	Notes
9μm Core Diameter SMF	L		40		km	
Data Rate			100~1250		Mbps	
Transmitter						
Center Wavelength	λ_C	1480	1490	1500	nm	
Spectral Width (-20dB)	Δλ			1	nm	
Average Output Power	Pout	-5		0	dBm	1
Extinction Ratio @ 1250Mbps	ER	6			dB	
Side Mode Suppression Ratio	SMSR	30			dB	
Rise/Fall Time (20%~80%)	Tr/tf			0.26	ns	
Output Optical Eye (Note 2)	Compliant with IEEE 803ah-2004					5
TX_Disable Assert Time	t_off			10	us	
Pout@TX_Disable Assserted	Pout			-45	dBm	
Receiver						
Center Wavelength	λ_C	1260	1310	1360	nm	
Receiver Sensitivity @1250Mbps	Pmin			-24	dBm	4
Receiver Overload	Pmax	-3			dBm	
Return Loss		12			dB	
Optical Path Penalty				1	dB	
LOS De-Assert @1250Mbps	LOSD			-25	dBm	
LOS Assert	LOSA	-35			dBm	
LOS Hysteresis		0.5			dB	6

Notes:

1. Output is coupled into a 9/125μm single-mode fiber.
2. Filtered measured with a PRBS 2^7-1.
3. LVPECL logic, internally AC coupled.
4. Minimum average optical power measures at BER less than 1E-12, with a 2^7-1 PRBS and ER=9 dB

5. Eye Pattern Mask

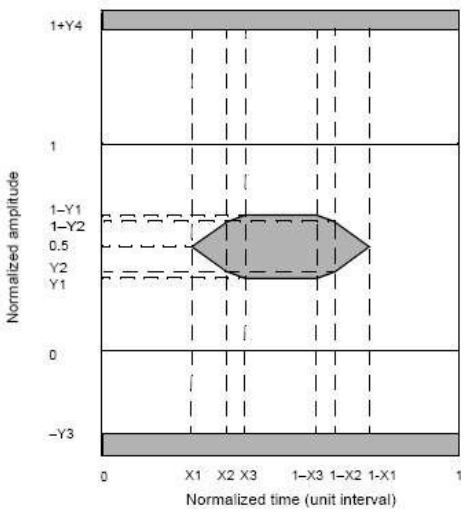

6. LOS Hysteresis

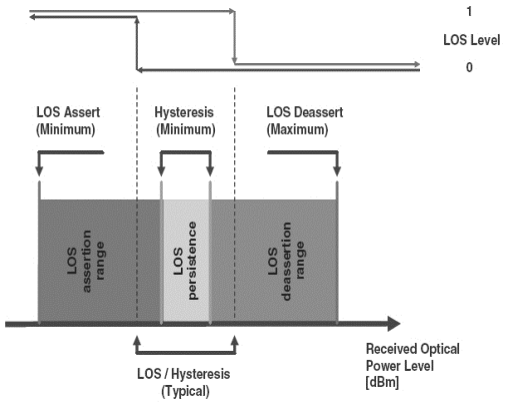

Pin Descriptions

Pin	Symbol	Channel No.	Function	Ref.
1	VeeT	Common	Transmitter Ground	Note 3
2	TX Fault	Common	Transmitter Fault Indication	Note 8
3	TX1_ Disable	1	Transmitter Disable of Ch1	Note 1, module disables on high or open
4	MOD-DEF2	Common	Two-Wires Interface Data	Note 2, 2wire serial ID interface SDA
5	MOD-DEF1	Common	Two-Wires Interface Clock	Note 2, 2wire serial ID interface SCL
6	TD2-	2	Inverted Transmit Data Input of Ch2	Note 6
7	TD2+	2	Transmit Data Input of Ch2	Note 6
8	LOS1	1	Loss of Signal of CH1.	Note 7
9	RD2+	2	Received Data output of Ch2	Note 4
10	RD2-	2	Inverted Received Data output of Ch2	Note 4
11	VEE	Common	Transceiver Ground	Note 3
12	RD2-	1	Inverted received Data output of Ch1.	Note 4
13	RD2-	2	Received Data output of Ch1	Note 4
14	LOS2	2	Loss of Signal of CH2	Note 7
15	VCCR	Common	Receiver power	Note 5, 3.3V 5%
16	VCCT	Common	Transmitter Power	Note 5, 3.3V 5%
17	TX2_ Disable	2	Transmitter Disable of Ch2	Note 1, Module disables on high or open
18	TD1+	1	Transmit Data Input of Ch1	Note 6
19	TD1-	1	Inverted Transmit Data Input of Ch1	Note 6
20	VEE	Common	Transceiver Ground	Note 6

Notes:

1. TX_Disable1,2 are an input that us used to shut down the transmitter optical output. It is pulled up within the module with a 4.7K-10K_resistor. It's states are:
   Low (0-0.8V): Transmitter on
   (>0.8, <2.0V): Undefined
   High (2.0-3.465V): Transmitter Disabled
   Open: Transmitter Disabled
2. Mod-Def 1,2. These are the module definition pins. They should be pulled up with a 4.7K-10K_resistor on the host board. The pull-up voltage shall be VccT or VccR.
   Mod-Def 1 is the clock line of two wire serial interfaces for serial ID. Mod-Def 2 is the data line of two wire serial interface for serial ID.
3. VEE may be internally connected within the SFO module.
4. RD1, 2-/+: These are the differential receiver outputs. They are AC couples 100_ differential lines which should be terminated with 100_(differential) at the user SERDES. The AC coupling is done inside the

module and is this not required on the host board.

5. VccT, VccR are the power supplies. They are defined as 3.3V ±5% at the SFP connector pin. Maximum supply current is 600mA@3.3V. Vcc may be internally connected within the SFP transceiver module.
6. TD1, 2-/+: These are the differential transmitter inputs. They are AC coupled, differential lines with 100_differential termination inside the module. The AC coupling is done inside the module and is thus not required on the host board.
7. LOS 1,2 (Loss of Signal) is an open collector/drain output, which should be pulled up with a 4.7K-– 10KΩ resistor. Pull up voltage between 2.0V and VccT, R+0.3V. When high, this output indicates the received optical power is below the worst-case receiver sensitivity (as defined by the standard in use). Low indicates normal operation. In the low state, the output will be pulled to <0.4V.
8. TX Fault report transceiver status as following:
   TX Fault is an open collector/drain output, which should be pulled up with a a 4.7K–10K_ resistor on the host board. Pull up voltage between 2.0V and VccT, R+0.3V. When high, output indicated a laser fault of some kind either in Channel 1 or Channel 2. The Host shall read Channel1/2: A2H/AAH: 110 for details: TX Fault from channel 1 if bit 2 is set in [A2H:110]; TX Fault from channel 2 if bit 2 is set in [B2H: 110]. Low indicated normal operation. In the low state, the output will be pulled to < 0.8V.

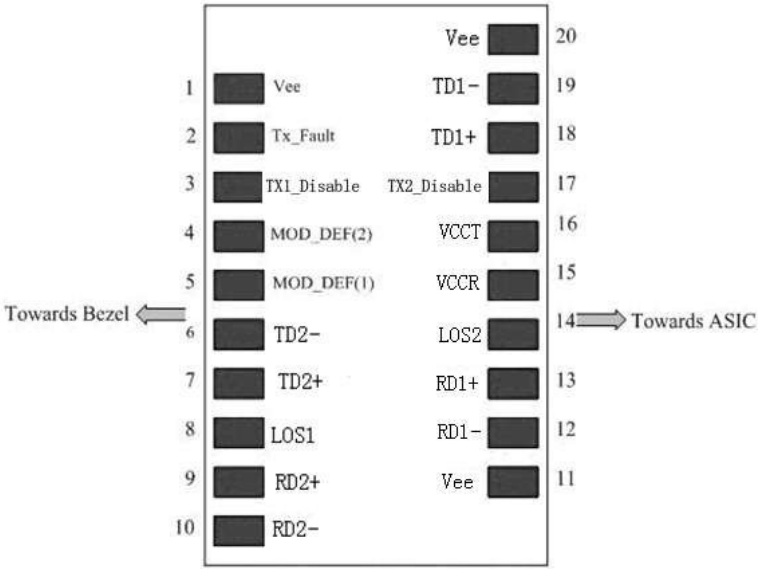

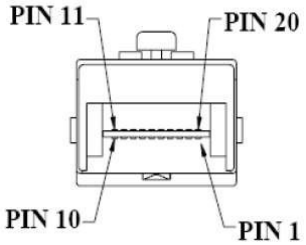

Recommended Circuit Schematic

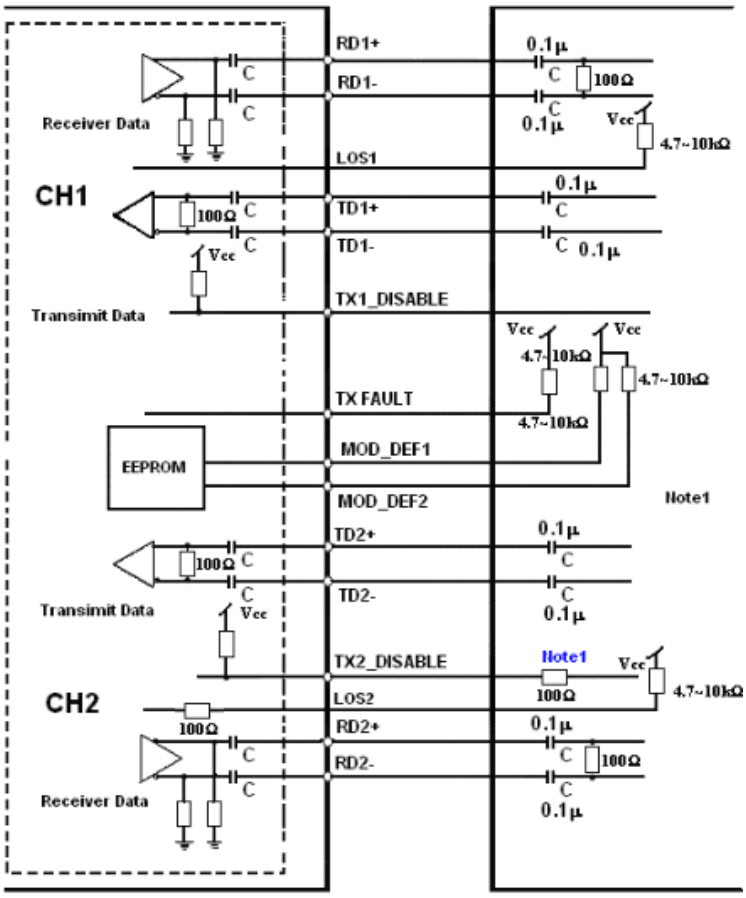

Note1：Recommendation 100Ω series resistance on host board.

Laser Emission



Mechanical Specifications

Small Form Factor Pluggable (SFP) transceivers are compatible with the dimensions defined by the SFP Multi-Sourcing Agreement (MSA).

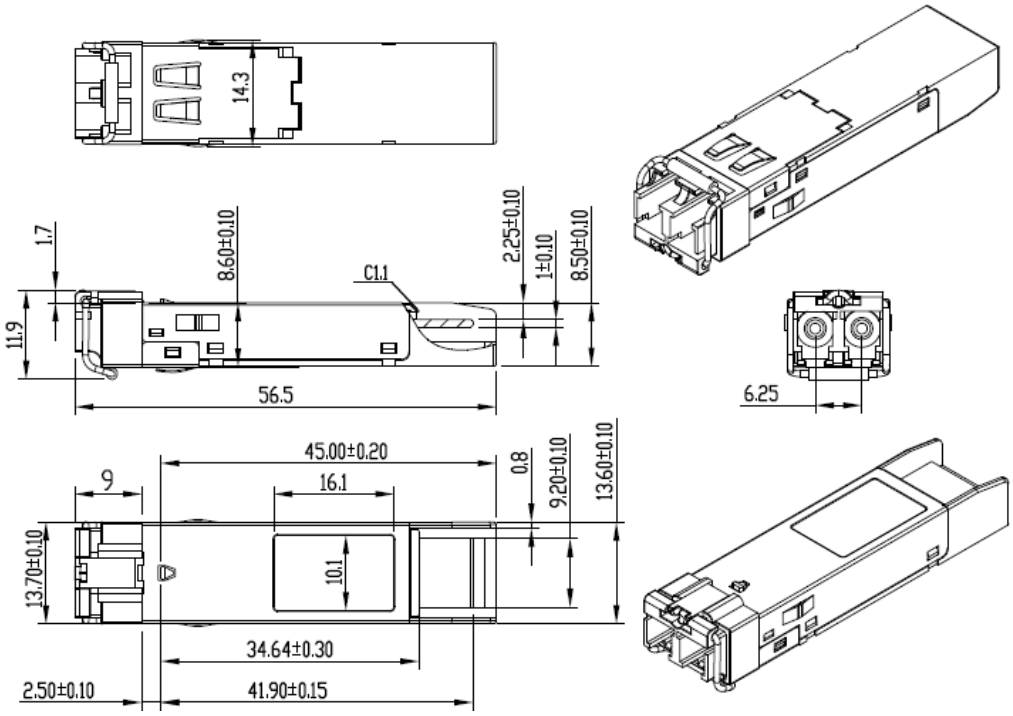

EEPROM Information

EEPROM memory map specific data field description is as below:

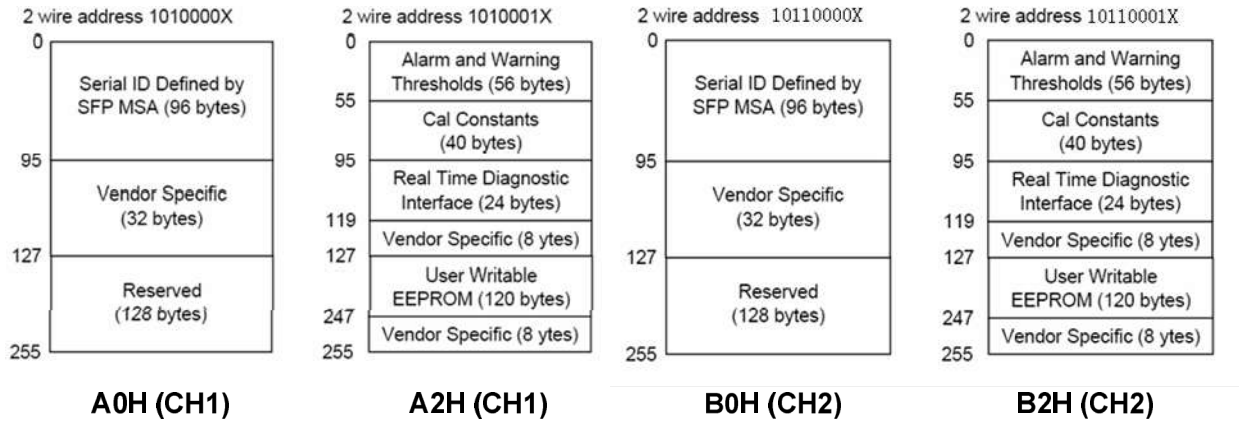

About AddOn Networks

In 1999, AddOn Networks entered the market with a single product. Our founders fulfilled a severe shortage for compatible, cost-effective optical transceivers that compete at the same performance levels as leading OEM manufacturers. Adhering to the idea of redefining service and product quality not previously had in the fiber optic networking industry, AddOn invested resources in solution design, production, fulfillment, and global support.

Combining one of the most extensive and stringent testing processes in the industry, an exceptional free tech support center, and a consistent roll-out of innovative technologies, AddOn has continually set industry standards of quality and reliability throughout its history.

Reliability is the cornerstone of any optical fiber network and is ingrained in AddOn's DNA. It has played a key role in nurturing the long-term relationships developed over the years with customers. AddOn remains committed to exceeding industry standards with certifications ranging from NEBS Level 3 to ISO 9001:2015 with every new development while maintaining the signature reliability of its products.



U.S. Headquarters

Email: sales@addonnetworks.com

Telephone: +1 877.292.1701

Fax: 949.266.9273

Europe Headquarters

Email: salesemea@addonnetworks.com

Telephone: +44 1285 842070