SFP-GIG-LH70-DW5333-AO

Alcatel-Lucent Nokia® SFP-GIG-LH70-DW5333 Compatible TAA 1000Base-DWDM SFP Transceiver 100GHz (SMF, 1553.33nm, 120km, LC, DOM)

Features:

- INF-8074 and SFF-8472 Compliance
- Single 3.3V Power Supply
- Duplex LC Connector
- Commercial Temperature 0 to 70 Celsius
- Power Dissipation: 1.5W
- Single-mode Fiber
- Hot Pluggable
- Operating Temperature: 0 to 70 Celsius
- Excellent ESD Protection
- Metal with Lower EMI
- RoHS Compliant and Lead Free



Applications:

- 1x Fibre Channel
- Gigabit Ethernet over DWDM
- Access, Metro and Enterprise

Product Description

This Alcatel-Lucent Nokia® SFP-GIG-LH70-DW5333 compatible SFP transceiver provides 1000Base-DWDM throughput up to 120km over single-mode fiber (SMF) using a wavelength of 1553.33nm via an LC connector. It can operate at temperatures between 0 and 70C. Our transceiver is built to meet or exceed OEM specifications and is guaranteed to be 100% compatible with Alcatel-Lucent Nokia®. It has been programmed, uniquely serialized, and tested for data-traffic and application to ensure that it will initialize and perform identically. All of our transceivers comply with Multi-Source Agreement (MSA) standards to provide seamless network integration. Additional product features include Digital Optical Monitoring (DOM) support which allows access to real-time operating parameters. This transceiver is Trade Agreements Act (TAA) compliant. We stand behind the quality of our products and proudly offer a limited lifetime warranty.

AddOn's transceivers are RoHS compliant and lead-free.

TAA refers to the Trade Agreements Act (19 U.S.C. & 2501-2581), which is intended to foster fair and open international trade. TAA requires that the U.S. Government may acquire only "U.S.-made or designated country end products."

TAA COMPLIANT

DWDM Wavelengths

ITU Channel	Frequency (THz)	Center Wavelength (nm)	ITU Channel	Frequency (THz)	Center Wavelength (nm)
16	191.60	1564.68	**42**	194.20	1543.73
17	191.70	1563.86	**43**	194.30	1542.94
18	191.80	1563.05	**44**	194.40	1542.14
19	191.90	1562.23	**45**	194.50	1541.35
20	192.00	1561.42	**46**	194.60	1540.56
21	192.10	1560.61	**47**	194.70	1539.77
22	192.20	1559.79	**48**	194.80	1538.98
23	192.30	1558.98	**49**	194.90	1538.19
24	192.40	1558.17	**50**	195.00	1537.40
25	192.50	1557.36	**51**	195.10	1536.61
26	192.60	1556.55	**52**	195.20	1535.82
27	192.70	1555.75	**53**	195.30	1535.04
28	192.80	1554.94	**54**	195.40	1534.25
29	192.90	1554.13	**55**	195.50	1533.47
30	193.00	1553.33	**56**	195.60	1532.68
31	193.10	1552.52	**57**	195.70	1531.90
32	193.20	1551.72	**58**	195.80	1531.12
33	193.30	1550.92	**59**	195.90	1530.33
34	193.40	1550.12	**60**	196.00	1529.55
35	193.50	1549.32	**61**	196.10	1528.77
36	193.60	1548.51	**62**	196.20	1527.99
37	193.70	1547.72	**63**	196.30	1527.22
38	193.80	1546.92	**64**	196.40	1526.44
39	193.90	1546.12	**65**	196.50	1525.66
40	194.00	1545.32	**66**	196.60	1524.89
41	194.10	1544.53			

Absolute Maximum Ratings

Parameter	Symbol	Min.	Typ.	Max.	Unit	Notes
Data Rate				1.25	Gbps	
Link Budget		32			dB	
Operating Case Temperature	Tc	0		70	℃	
Storage Temperature	Tstg	-40		85	℃	
Maximum Voltage	Vcc	-0.5		3.6	V	
Relative Humidity (Non-Condensing)	RH	5		85	%	

Notes:

1. Exceeding any one of these values may destroy the device permanently.

Electrical Characteristics

Parameter		Symbol	Min.	Typ.	Max.	Unit	Notes
Power Supply Voltage		Vcc	3.14	3.3	3.47	V	
Power Supply Current		Icc			450	mA	
Transmitter							
LVPECL Inputs (Differential)		VIN	400		2000	mVp-p	1
Input Impedance (Differential)		ZIN	85	100	115	Ω	2
Tx_Disable	**Disable**		2		Vcc	V	
	Enable		0		0.8		
Tx_Fault	**Fault**		2		Vcc+0.3	V	
	Normal		0		0.5		
Receiver							
LVPECL Outputs (Differential)		VOUT	370		700	mVp-p	3
Output Impedance (Differential)		ZOUT	85	100	115	Ω	
Tx_Disable Assert Time		t_off			10	us	
Rx_LOS	**High**		2		Vcc+0.3	V	
	Low		0		0.8		
MOD_DEF (0.2)		VOH	2.5			V	4
		VOL	0		0.5		

Notes:

1. LVPECL logic. Internally AC coupled inputs.
2. RIN > 100kΩ @ DC.
3. After internal AC coupling.
4. With serial ID.

Optical Characteristics

Parameter	Symbol	Min.	Typ.	Max.	Unit	Notes
Transmitter						
Center Wavelength	λC	ITU-T DWDM Center Wavelength			nm	
Center Wavelength Variation		-0.1		0.1	nm	
Center Frequency Spacing	Δf		100		GHz	
Spectral Width (-20dB)	Δλ			1	nm	
Side-Mode Suppression Ratio	SMSR	30			dB	
Average Output Power	POUT	0		5	dBm	1
Optical Extinction Ratio	ER	9			dB	
Transmitter Dispersion Penalty	TDP			3.0	dB	
Average Power of Off Transmitter	Poff			-45	dBm	
Rise/Fall Time (20-80%)	Tr/Tf			260	ps	
Output Optical Eye	Compliant with IEEE 802.3					2
Receiver						
Center Wavelength	λC	1528		1620	nm	
Receiver Sensitivity	PSEN			-32	dBm	3, 4
Receiver Overload	POVER	-10			dBm	4
LOS De-Assert	LOSD			-33	dBm	
LOS Assert	LOSA	-45			dBm	
LOS Hysteresis	LOSH	0.5		6	dB	

Notes:

1. Output power is measured by coupling into a 9/125µm single-mode fiber.
2. Filtered, measured with a PRBS 2^7-1 test pattern @1250Mbps.
3. Minimum average optical power, measured at BER less than $1E^{-12}$ with 2^7-1 PRBS and ER=9dB.
4. Measured with receiving wavelength in the range of 1524nm to 1620nm.

Pin Descriptions

Pin	Symbol	Name/Description	Plug Sequence	Notes
1	VeeT	Transmitter Ground.	1	5
2	Tx_Fault	Transmitter Fault Indication.	3	1
3	Tx_Disable	Transmitter Disable. Module disables on “high” or “open.”	3	2
4	MOD_DEF2	Module Definition 2. 2-wire serial ID interface.	3	3
5	MOD_DEF1	Module Definition 1. 2-wire serial ID interface.	3	3
6	MOD_DEF0	Module Definition 0. Grounded within the module.	3	3
7	Rate Select	Not Connected. Function not available.	3	
8	LOS	Loss of Signal.	3	4
9	VeeR	Receiver Ground.	1	
10	VeeR	Receiver Ground.	1	5
11	VeeR	Receiver Ground.	1	5
12	RD-	Inverted Received Data Out.	3	6
13	RD+	Received Data Out.	3	6
14	VeeR	Receiver Ground.	1	5
15	VccR	3.3 ± 5% Receiver Power.	2	7
16	VccT	3.3 ± 5% Transmitter Power.	2	7
17	VeeT	Transmitter Ground.	1	5
18	TD+	Transmit Data In.	3	8
19	TD-	Inverted Transmit Data In.	3	8
20	VeeT	Transmitter Ground.	1	5

Notes

1. Tx_Fault is an open collector/drain output that should be pulled up with a 4.7kΩ to 10kΩ resistor on the host board. When “high,” the output indicates a laser fault of some kind. “Low” indicates normal operation. In the “low” state, the output will be pulled to <0.8V.
2. Tx_Disable is an input that is used to shut down the transmitter optical output. It is pulled up within the module with a 4.7kΩ to 10kΩ resistor. Its states are：
   Low (0V-0.8V): Transmitter On
   (>0.8V, <2.0V): Undefined
   High (2.0V–3.465V): Transmitter Disabled
   Open: Transmitter Disabled.
3. MOD_DEF0, 1, & 2. These are the module definition pins. They should be pulled up with a 4.7kΩ to 10kΩ resistor on the host board.
   MOD_DEF0 is grounded by the module to indicate that the module is present.
   MOD_DEF1 is the clock line of the 2-wire serial interface for serial ID.
   MOD_DEF2 is the data line of the 2-wire serial interface for serial ID.
4. LOS (Loss of Signal) is an open collector/drain output that should be pulled up with a 4.7kΩ to 10kΩ resistor. When “high,” this output indicates the received optical power is below the worst-case receiver sensitivity (as defined by the standard in use). “Low” indicates normal operation in the “low” state. The output will be pulled to <0.8V.
5. VeeR and VeeT may be internally connected within the SFP module.
6. RD-/+. These are the differential receiver outputs. They are AC-coupled, 100Ω differential lines that should be terminated with 100Ω (differential) at the user SERDES.

7. VccR and VccT are the receiver and transmitter power supplies. They are defined as 3.3V ± 5% at the SFP connector pin. VccR and VccT may be internally connected within the SFP transceiver.
8. TD-/+. These are the differential transmitter inputs. They are AC-coupled, differential lines with 100Ω differential termination inside the module.

Pin-Out Details

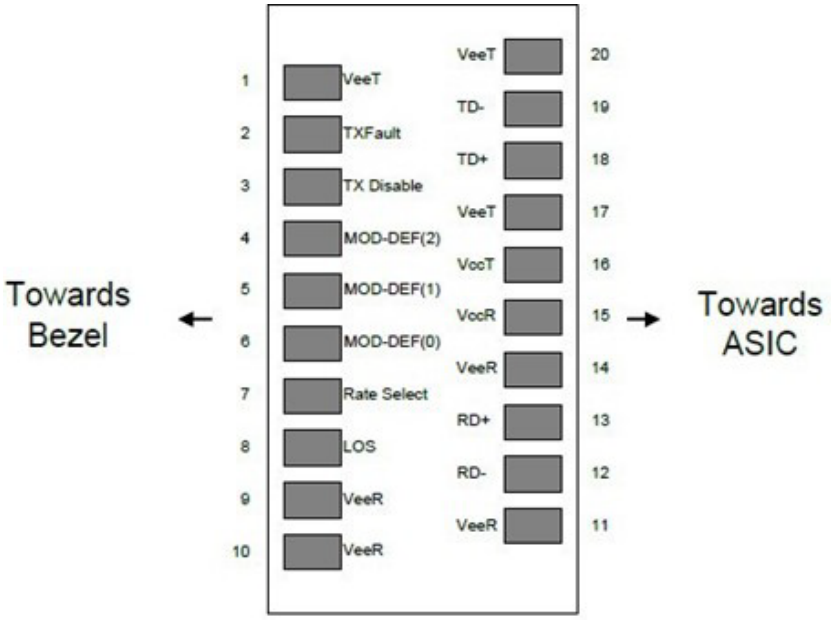

Recommended Circuit Schematic

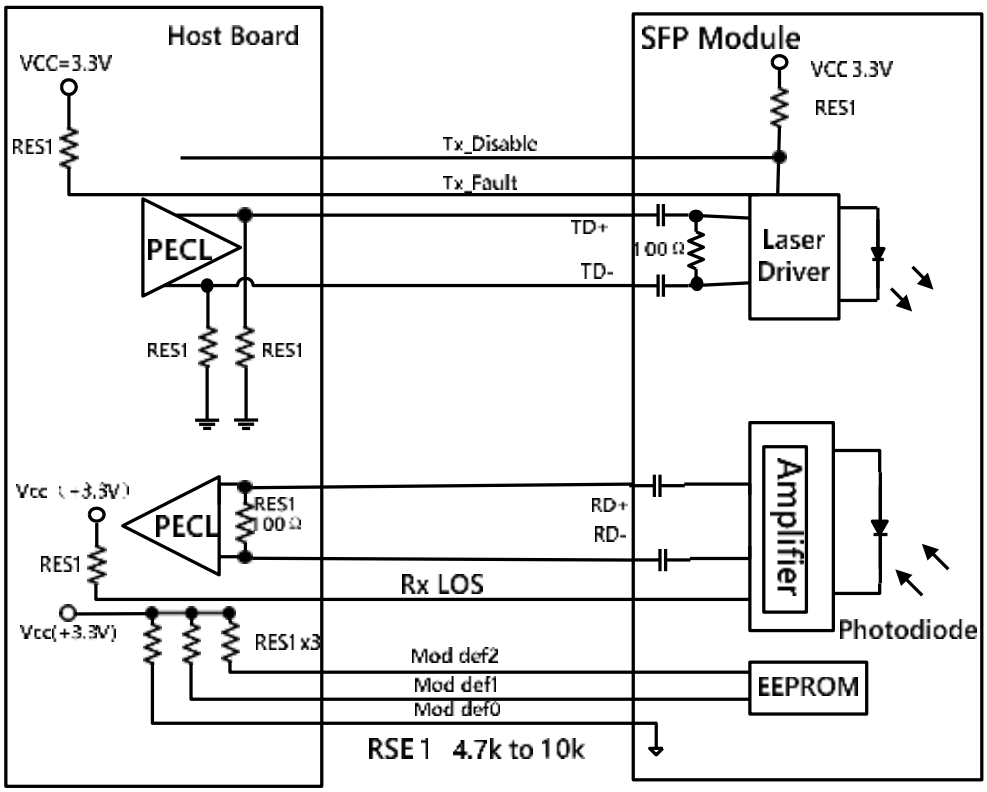

Mechanical Specifications

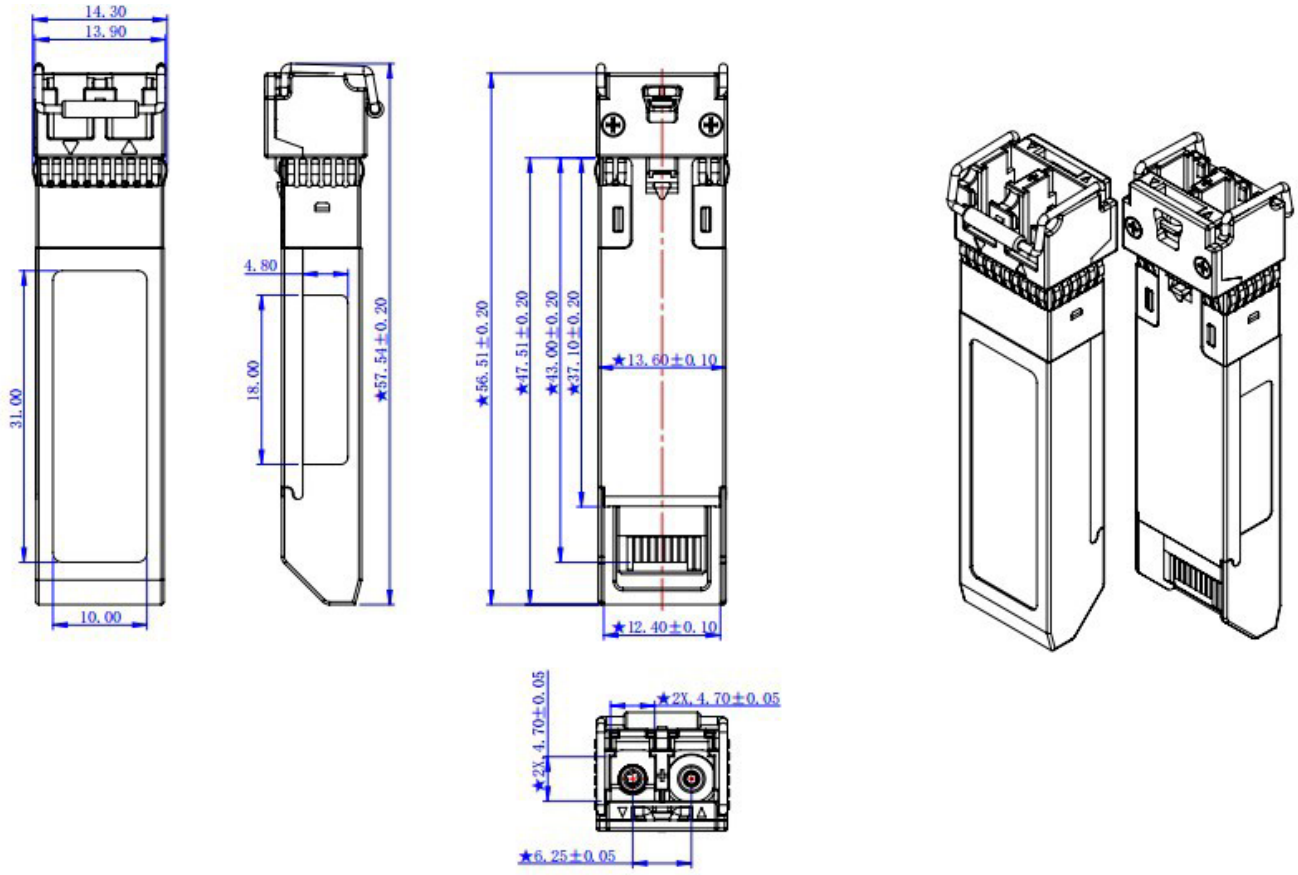

About AddOn Networks

In 1999, AddOn Networks entered the market with a single product. Our founders fulfilled a severe shortage for compatible, cost-effective optical transceivers that compete at the same performance levels as leading OEM manufacturers. Adhering to the idea of redefining service and product quality not previously had in the fiber optic networking industry, AddOn invested resources in solution design, production, fulfillment, and global support.

Combining one of the most extensive and stringent testing processes in the industry, an exceptional free tech support center, and a consistent roll-out of innovative technologies, AddOn has continually set industry standards of quality and reliability throughout its history.

Reliability is the cornerstone of any optical fiber network and is ingrained in AddOn's DNA. It has played a key role in nurturing the long-term relationships developed over the years with customers. AddOn remains committed to exceeding industry standards with certifications ranging from NEBS Level 3 to ISO 9001:2015 with every new development while maintaining the signature reliability of its products.



U.S. Headquarters

Email: sales@addonnetworks.com

Telephone: +1 877.292.1701

Fax: 949.266.9273

Europe Headquarters

Email: salesemea@addonnetworks.com

Telephone: +44 1285 842070