3HE05936BB-AO

Alcatel-Lucent Nokia® 3HE05936BB Compatible TAA 1000Base-CWDM SFP Transceiver (SMF, 1490nm, 70km, LC)

Features:

- INF-8074 and SFF-8472 Compliance
- Duplex LC Connector
- Commercial Temperature 0 to 70 Celsius
- Single-mode Fiber
- Hot Pluggable
- Excellent ESD Protection
- Metal with Lower EMI
- RoHS Compliant and Lead Free



Applications:

- 1x Fibre Channel
- Gigabit Ethernet over CWDM
- Access, Metro and Enterprise

Product Description

This Alcatel-Lucent Nokia® compatible SFP transceiver provides 1000Base-CWDM throughput up to 70km over single-mode fiber (SMF) using a wavelength of 1490nm via an LC connector. It is guaranteed to be 100% compatible with the equivalent Alcatel-Lucent Nokia® transceiver. This easy to install, hot swappable transceiver has been programmed, uniquely serialized and data-traffic and application tested to ensure that it will initialize and perform identically. It is built to meet or exceed the specifications of Alcatel-Lucent® Nokia®, as well as to comply with MSA (Multi-Source Agreement) standards to ensure seamless network integration. This transceiver is Trade Agreements Act (TAA) compliant. We stand behind the quality of our products and proudly offer a limited lifetime warranty.

AddOn's transceivers are RoHS compliant and lead-free.

TAA refers to the Trade Agreements Act (19 U.S.C. & 2501-2581), which is intended to foster fair and open international trade. TAA requires that the U.S. Government may acquire only "U.S.-made or designated country end products."

TAA COMPLIANT

Regulatory Compliance

- ESD to the Electrical PINs: compatible with MIL-STD-883E Method 3015.4
- ESD to the LC Receptacle: compatible with IEC 61000-4-3
- EMI/EMC compatible with FCC Part 15 Subpart B Rules, EN55022:2010
- Laser Eye Safety compatible with FDA 21CFR, EN60950-1& EN (IEC) 60825-1,2
- RoHS compliant with EU RoHS 2.0 directive 2015/863/EU

Absolute Maximum Ratings

Parameter	Symbol	Min.	Typical	Max.	Unit
Maximum Supply Voltage	Vcc	-0.5		4.0	V
Storage Temperature	TS	-40		85	°C
Operating Case Temperature	Tc	0	25	70	°C
Operating Humidity	RH	5		95	%
Data Rate			1.25 1.0625		Gb/s

Electrical Characteristics (TOP=25°C, Vcc=3.3 Volts)

Parameter	Symbol	Min.	Typ.	Max.	Unit	Notes
Power Supply Voltage	Vcc	3.135	3.30	3.465	V	
Power Supply Current	Icc			300	mA	
Power Dissipation	P_D			1000	mW	
Transmitter						
Differential data input voltage (TD +/-)		300		2200	mV_{P-P}	1
Low speed output: Transmitter Fault (TX_FAULT) / Loss of Signal (LOS)	VOH	2.0		Vcc	V	3
	VOL	0		0.8	V	
Low speed input: Transmitter Disable (TX_DISABLE), MOD_DEF 1, MOD_DEF 2	VIH	2.0		Vcc	V	4
	VIL	0		0.8	V	
Receiver						
Differential data output voltage (RD +/-)		600		1200	mV_{P-P}	2

Notes

1. Internally AC coupled and terminated to 100Ω differential load.
2. Internally AC coupled, but requires a 100Ω differential termination or internal to Serializer/Deserializer.
3. Pulled up externally with a 4.7KΩ-10KΩ resistor on the host board to VCCT,R.
4. Mod_Def1 and Mod_Def2 must be pulled up externally with a 4.7KΩ-10KΩ resistor on the host board to VCCT,R.

Optical Characteristics

Parameter	Symbol	Min.	Typ.	Max.	Unit	Notes
Transmitter						
Launch Optical Power	Po	-5		+5	dBm	
Center Wavelength Range	λc	λ-6.5	λ	λ+6.5	nm	1
Extinction Ratio	EX	9			dB	
Spectral Width (-20dB)	Δλ			1	nm	
Side Mode Suppression Ratio	SMSR	30			dB	
Total Jitter	TJ			266	ps	
Dispersion Penalty				1	dB	
Optical Rise/ Fall Time	T_{rise}/T_{fall}			260	ps	
Pout @TX-Disable Asserted	P_{off}			-45	dBm	
Eye Diagram	IEEE Std 802.3-2005 Gigabit Ethernet 1000Base-LX compatible					
Receiver						
Receiver Sensitivity	S			-24	dBm	2
Receiver overload	P_{OL}	-3			dBm	
Optical Return Loss	ORL	12			dB	
LOS De-Assert	LOS_D			-25	dBm	
LOS Assert	LOS_A	-35			dBm	
LOS Hysteresis		0.5	3	5	dB	

Notes:

1. The CWDM Transmitter Center Wavelengths "λ" are: 1270, 1290, 1310, 1330, 1350, 1370, 1390, 1410, 1430, 1450, 1470, 1490, 1510, 1530, 1550, 1570, 1590 and 1610nm. 1270 to 1450nm are named herein as O-band wavelength and 1470 to 1610nm as L-band wavelength generally.
2. Measured with PRBS 27-1 test pattern, 1.25Gb/s, EX=9dB, BER<10-12.
3. Exceeding the Receiver overload can physically damage the module. Please use appropriate attenuation.

Timing Characteristics

Parameter	Symbol	Min.	Typ.	Max.	Unit	Notes
Tx_disable assert time	T_off			10	us	
Tx_disable negate time	T_on			1	ms	
Time to initialize, include reset of TX_FAULT	T_init			300	ms	
TX_FAULT from fault to assertion	T_fault			100	us	
Tx_disable time to start reset	T_reset	10			us	
Receiver LOS Assert Time (on to off)	T_D,RX_LOS			80	us	
Receiver LOS Assert Time (off to on)	T_A,RX_LOS			80	us	
Serial I2C Clock Rate	I2C_Clock			100	kHz	

Pin Descriptions

Pin	Symbol	Name/Descriptions	Engagement order	Ref.
1	VeeT	Transmitter Ground	1	
2	TX Fault	Transmitter Fault Indication	3	1
3	TX Disable	Transmitter Disable-Module disables on high or open	3	2
4	MOD-DEF2	Module Definition 2-Two wire serial ID interface	3	3
5	MOD-DEF1	Module Definition 1-Two wire serial ID interface	3	3
6	MOD-DEF0	Module Definition 0-Grounded in module	3	3
7	Rate Select	Not Connected	3	
8	LOS	Loss of Signal	3	4
9	VeeR	Receiver Ground	1	
10	VeeR	Receiver Ground	1	
11	VeeR	Receiver Ground	1	
12	RD-	Inverse Received Data out	3	5
13	RD+	Received Data out	3	5
14	VeeR	Receiver Ground	1	
15	VccR	Receiver Power - +3.3V±5%	2	6
16	VccT	Transmitter Power - +3.3 V±5%	2	6
17	VeeT	Transmitter Ground	1	
18	TD+	Transmitter Data In	3	7
19	TD-	Inverse Transmitter Data In	3	7
20	VeeT	Transmitter Ground	1	

Notes:

1. TX Fault is open collector/drain output which should be pulled up externally with a 4.7KΩ-10KΩ resistor on the host board to supply < VccT +0.3V or VccR + 0.3V. When high, this output indicates a laser fault of some kind. Low indicates normal operation. In the low state, the output will be pulled to <0.8V.
2. TX Disable input is used to shut down the laser output per the state table below. It is pulled up within the module with a 4.7KΩ-10KΩ resistor.

Low (0-0.8V):	Transmitter on
Between (0.8V and 2V):	Undefined
High (2.0-VccT):	Transmitter Disabled
Open:	Transmitter Disabled

3. Mod-Def 0, 1, 2. These are the module definition pins. They should be pulled up with a 4.7KΩ-10KΩ resistor on the host board to supply less than VccT+0.3V or VccR+0.3V.
   Mod-Def 0 is grounded by the module to indicate that the module is present.
   Mod-Def 1 is clock line of two wire serial interface for optional serial ID.
   Mod-Def 2 is data line of two wire serial interface for optional serial ID.
4. LOS (Loss of signal) is an open collector/drain output which should be pulled up externally with a 4.7KΩ-10KΩ resistor on the host board to supply <VccT+0.3V or VccR+0.3V. When high, this output indicates the received optical power is below the worst case receiver sensitivity (as defined by the standard in use). Low indicates normal operation. In the low state, the output will be pulled to <0.8V.
5. RD-/+: These are the differential receiver outputs. They are AC coupled 100Ω differential lines which should be terminated with 100Ω differential at the user SERDES. The AC coupling is done inside the module and thus not required on the host board.
6. VccR and VccT are the receiver and transmitter power supplies. They are defined as 3.3V±5% at the SFP connector pin. The in-rush current will typically be no more than 30mA above steady state supply current after 500ns.
7. TD -/+: These are the differential transmitter inputs. They are AC coupled differential lines with 100Ω differential termination inside the module. The AC coupling is done inside the module and is thus not required on host board.

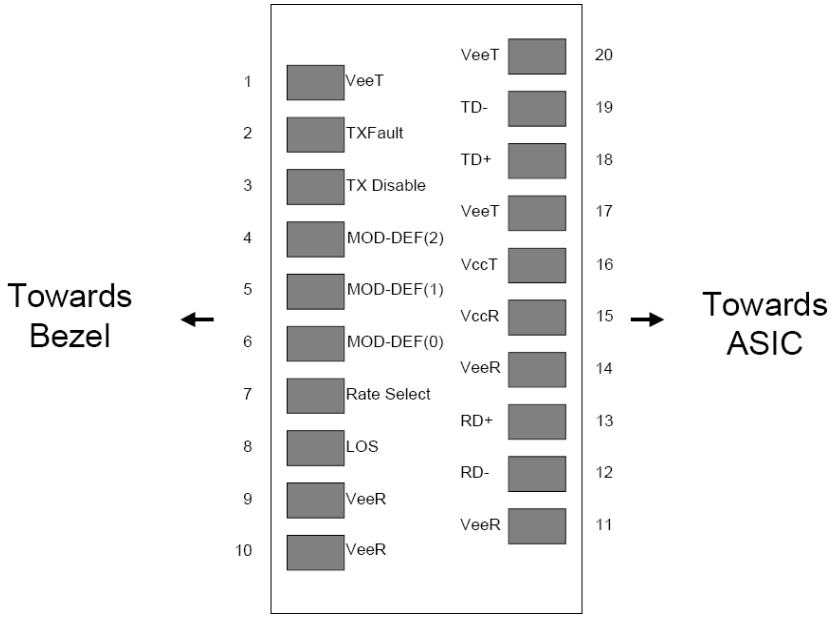

Pin-out of connector Block on Host board

Digital Diagnostic Memory Map

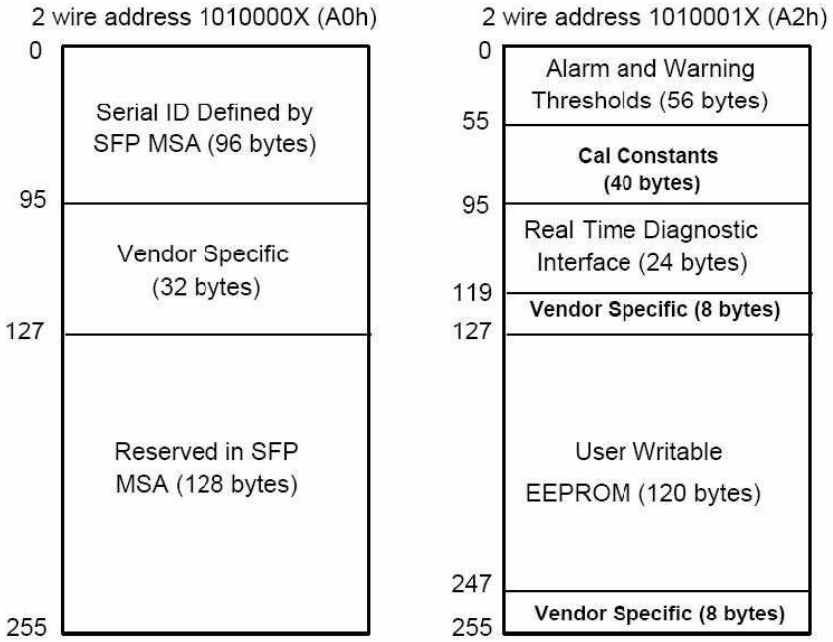

Required Host Board Components

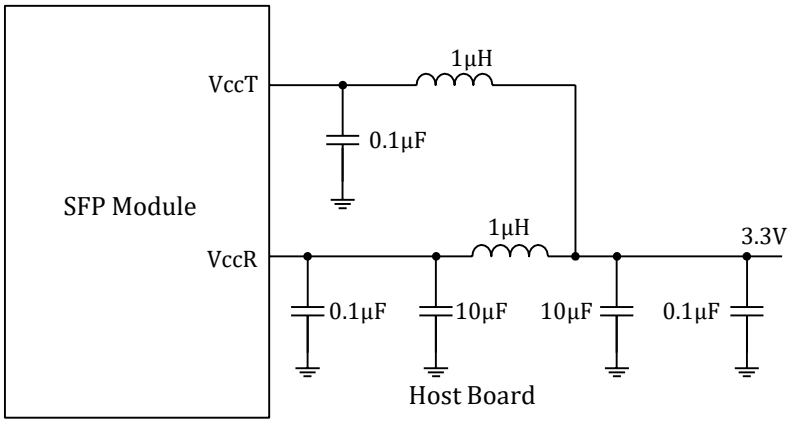

Recommended Application Interface Circuit

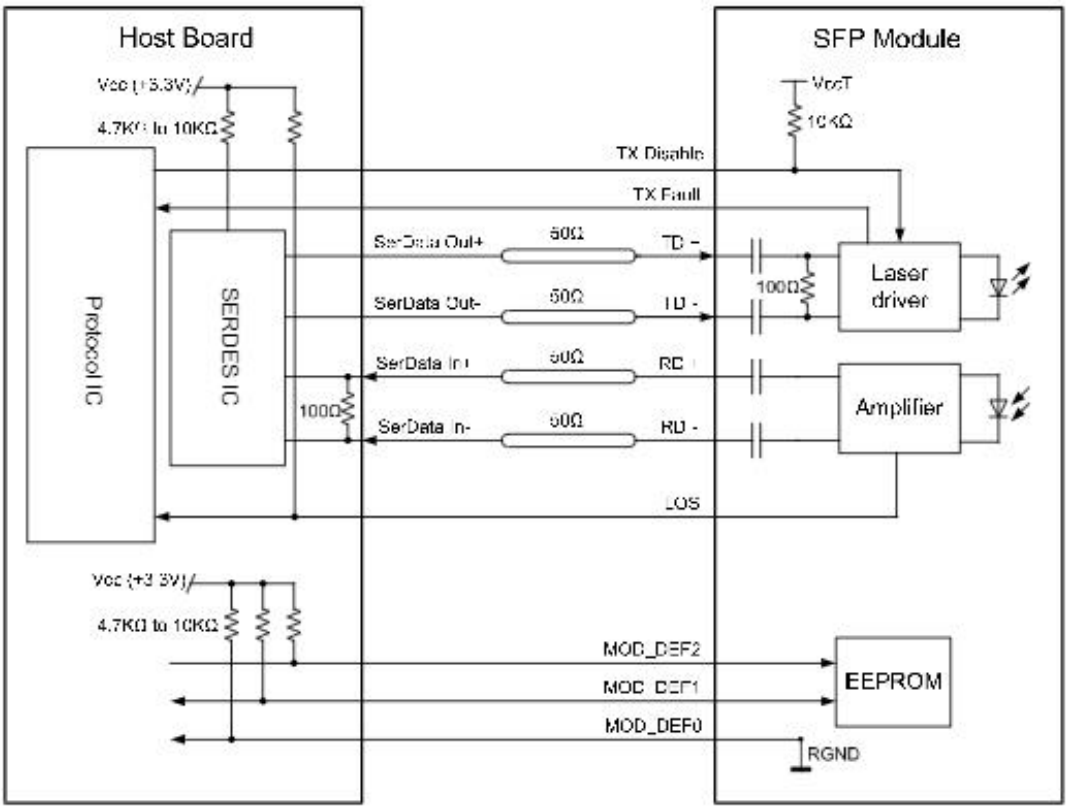

Mechanical Specifications

Small Form Factor Pluggable (SFP) transceivers are compatible with the dimensions defined by the SFP Multi-Sourcing Agreement (MSA).

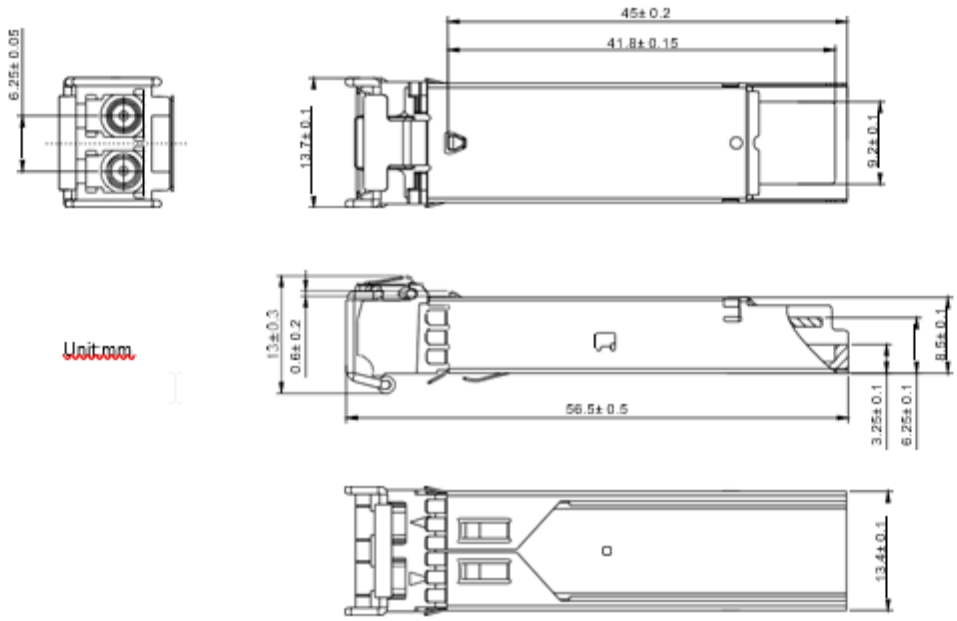

About AddOn Networks

In 1999, AddOn Networks entered the market with a single product. Our founders fulfilled a severe shortage for compatible, cost-effective optical transceivers that compete at the same performance levels as leading OEM manufacturers. Adhering to the idea of redefining service and product quality not previously had in the fiber optic networking industry, AddOn invested resources in solution design, production, fulfillment, and global support.

Combining one of the most extensive and stringent testing processes in the industry, an exceptional free tech support center, and a consistent roll-out of innovative technologies, AddOn has continually set industry standards of quality and reliability throughout its history.

Reliability is the cornerstone of any optical fiber network and is ingrained in AddOn's DNA. It has played a key role in nurturing the long-term relationships developed over the years with customers. AddOn remains committed to exceeding industry standards with certifications ranging from NEBS Level 3 to ISO 9001:2015 with every new development while maintaining the signature reliability of its products.



U.S. Headquarters

Email: sales@addonnetworks.com

Telephone: +1 877.292.1701

Fax: 949.266.9273

Europe Headquarters

Email: salesemea@addonnetworks.com

Telephone: +44 1285 842070