**3HE00410CA-DW4135-AO**

Alcatel-Lucent Nokia® 3HE00410CA-DW4135 Compatible TAA 1000Base-DWDM SFP Transceiver 100GHz (SMF, 1541.35nm, 80km, LC, DOM)

**Features:**

- INF-8074 and SFF-8472 Compliance
- Duplex LC Connector
- Commercial Temperature 0 to 70 Celsius
- Single-mode Fiber
- Hot Pluggable
- Excellent ESD Protection
- Metal with Lower EMI
- RoHS Compliant and Lead Free



**Applications:**

- 1x Fibre Channel
- Gigabit Ethernet over DWDM
- Access, Metro and Enterprise

**Product Description**

This Alcatel-Lucent Nokia® 3HE00410CA-DW4135 compatible SFP transceiver provides 1000Base-DWDM throughput up to 80km over single-mode fiber (SMF) using a wavelength of 1541.35nm via an LC connector. It can operate at temperatures between 0 and 70C. Our transceiver is built to meet or exceed OEM specifications and is guaranteed to be 100% compatible with Alcatel-Lucent Nokia®. It has been programmed, uniquely serialized, and tested for data-traffic and application to ensure that it will initialize and perform identically. All of our transceivers comply with Multi-Source Agreement (MSA) standards to provide seamless network integration. Additional product features include Digital Optical Monitoring (DOM) support which allows access to real-time operating parameters. This transceiver is Trade Agreements Act (TAA) compliant. We stand behind the quality of our products and proudly offer a limited lifetime warranty.

AddOn's transceivers are RoHS compliant and lead-free.

TAA refers to the Trade Agreements Act (19 U.S.C. & 2501-2581), which is intended to foster fair and open international trade. TAA requires that the U.S. Government may acquire only "U.S.-made or designated country end products."

TAA COMPLIANT

**Regulatory Compliance**

- ESD to the Electrical PINs: compatible with MIL-STD-883E Method 3015.4
- ESD to the LC Receptacle: compatible with IEC 61000-4-3
- EMI/EMC compatible with FCC Part 15 Subpart B Rules, EN55022:2010
- Laser Eye Safety compatible with FDA 21CFR, EN60950-1& EN (IEC) 60825-1,2
- RoHS compliant with EU RoHS 2.0 directive 2015/863/EU

**Wavelength Guide (100GHz ITU-T Channel)**

| ITU Channel | Frequency (THZ) | Center Wavelength (nm) |
|---|---|---|
| **61** | 196.1 | 1528.77 |
| **60** | 196.0 | 1529.55 |
| **59** | 195.9 | 1530.33 |
| **58** | 195.8 | 1531.12 |
| **57** | 195.7 | 1531.90 |
| **56** | 195.6 | 1532.68 |
| **55** | 195.5 | 1533.47 |
| **54** | 195.4 | 1534.25 |
| **53** | 195.3 | 1535.04 |
| **52** | 195.2 | 1535.82 |
| **51** | 195.1 | 1536.61 |
| **50** | 195.0 | 1537.40 |
| **49** | 194.9 | 1538.19 |
| **48** | 194.8 | 1538.98 |
| **47** | 194.7 | 1539.77 |
| **46** | 194.6 | 1540.56 |
| **45** | 194.5 | 1541.35 |
| **44** | 194.4 | 1542.14 |
| **43** | 194.3 | 1542.94 |
| **42** | 194.2 | 1543.73 |
| **41** | 194.1 | 1544.53 |
| **40** | 194.0 | 1545.32 |
| **39** | 193.9 | 1546.12 |
| **38** | 193.8 | 1546.92 |
| **37** | 193.7 | 1547.72 |
| **36** | 193.6 | 1548.51 |
| **35** | 193.5 | 1549.32 |
| **34** | 193.4 | 1550.12 |
| **33** | 193.3 | 1550.92 |
| **32** | 193.2 | 1551.72 |
| **31** | 193.1 | 1552.52 |
| **30** | 193.0 | 1553.33 |
| **29** | 192.9 | 1554.13 |
| **28** | 192.8 | 1554.94 |
| **27** | 192.7 | 1555.75 |
| **26** | 192.6 | 1556.55 |
| **25** | 192.5 | 1557.36 |

| | | |
|---|---|---|
| **24** | 192.4 | 1558.17 |
| **23** | 192.3 | 1558.98 |
| **22** | 192.2 | 1559.79 |
| **21** | 192.1 | 1560.61 |
| **20** | 192.0 | 1561.42 |
| **19** | 191.9 | 1562.23 |
| **18** | 191.8 | 1563.05 |
| **17** | 191.7 | 1563.86 |

### Absolute Maximum Ratings

| Parameter | Symbol | Min. | Max. | Unit |
|---|---|---|---|---|
| **Storage Temperature** | TS | -5 | 70 | °C |
| **Relative Humidity** | RH | 5 | 95 | % |
| **Supply Voltage** | Vcc | -0.5 | 3.6 | V |

### Recommended Operating Conditions

| Parameter | Symbol | Min. | Typ. | Max. | Unit |
|---|---|---|---|---|---|
| **Power Supply Voltage** | Vcc | 3.13 | 3.30 | 3.47 | V |
| **Power Supply Current** | Icc | | | 450 | mA |
| **Case Operating Temperature – Commercial** | $T_A$ | 0 | | 70 | °C |

### Electrical Characteristics (TOP=25°C, Vcc=3.3V)

| Parameter | Symbol | Min. | Typ. | Max. | Unit | Notes |
|---|---|---|---|---|---|---|
| **Transmitter** | | | | | | |
| **Transmit Input Differential Voltage (TD +/-)** | | 200 | | 2400 | mVp-p | 1 |
| **TX Disable-High** | | 2.0 | | 3.45 | V | |
| **TX Disable-Low** | | 0 | | 0.8 | V | |
| **TX Fault Output Voltage-High** | | 2.0 | | Vcc | V | 3 |
| **TX Fault Output Voltage-Low** | | 0 | | 0.5 | V | 4 |
| **Receiver** | | | | | | |
| **Recieve Input Differential Voltage (RD +/-)** | | 600 | | 1200 | mVp-p | 5 |
| **Output Differential Impedance** | Zout | 85 | 100 | 115 | ohms | |
| **Rx_LOS Output Voltage-High** | | 2.0 | | Vcc | V | 3 |
| **Rx_LOS Output Voltage-Low** | | 0 | | 0.8 | V | 4 |
| **MOD_DEF (0:2)** | VoH | 2.0 | | Vcc | V | 6 |
| | VoL | 0 | | 0.0 | V | |

**Notes:**

1. AC coupled and terminated to 100Ω differential load.
2. Rin > 100 kohms @DC.
3. Io = 400μA; Host Vcc.
4. Io = -4.0mA.
5. Internally AC coupled, but requires a 100Ω differential termination or internal to Serializer/Deserializer.
6. With Serial ID.

**Optical Characteristics**

| Parameter | Symbol | Min. | Typ. | Max. | Unit | Notes |
|---|---|---|---|---|---|---|
| **Transmitter** | | | | | | |
| **Channel Spacing** | Δf | | 100 | | GHz | |
| **Wavelength Stability** | $\Delta_{\lambda c}$ | --0.1 | | -0.1 | nm | |
| **Average Output Power** | Pout | 0 | | 5 | dB | |
| **Dispersion Penalty** | | | | 3 | dB | |
| **Side Mode Suppression Ratio** | SMSR | 30 | | | dB | |
| **Extinction Ratio** | EX | 8.2 | | | dB | |
| **Spectral Width (-20dB)** | | | | 0.3 | nm | |
| **Optical Rise/Fall Time (20%~~80%)** | tr/tf | | | 260 | ps | |
| **Output Optical Eye** | IUT-T G.957 Compliant | | | | | |
| **Receiver** | | | | | | |
| **Receive Wavelength** | C | 1528 | | 1564 | nm | |
| **Receiver Sensitivity** | Se | | | -24 | dBm | 1 |
| **Receiver Overload** | Pmax | -1 | | | Ω | |
| **LOS De-Assert** | LOSD | | | -25 | dBm | |
| **LOS Assert** | LOSA | -35 | | | dBm | |
| **LOS Hysteresis** | | 0.5 | | | V | |

**Notes**

1. Measured with PRBS 27-1 test pattern, 1.25Gb/s, EX=8dB, BER<$10^{-12}$.

**Pin Descriptions**

| Pin | Symbol | Name/Descriptions | Ref. |
|---|---|---|---|
| **1** | VeeT | Transmitter Ground (Common with Receiver Ground) | |
| **2** | TX Fault | Transmitter Fault Indication | 1 |
| **3** | TX Disable | Transmitter Disable-Module. Laser output disables on high or open. | 2 |
| **4** | MOD DEF (2) | Module Definition 2. Two wire serial ID interface. | 3 |
| **5** | MOD_DEF (1) | Module Definition 1. Two wire serial ID interface. | 3 |
| **6** | MOD_DEF (0) | Module Definition 0. Two wire serial ID interface. | 3 |
| **7** | Rate Select | No connection required. | |
| **8** | LOS | Loss of Signal indication. Logic 0 indicates normal operation. | 4 |
| **9** | VeeR | Receiver Ground (Common with Transmitter Ground) | |
| **10** | VeeR | Receiver Ground (Common with Transmitter Ground) | |
| **11** | VeeR | Receiver Ground (Common with Transmitter Ground) | |
| **12** | RD- | Receiver Inverted DATA out. AC Coupled. | 5 |
| **13** | RD+ | Receiver Non-inverted DATA out. AC Coupled. | 5 |
| **14** | VeeR | Receiver Ground (Common with Transmitter Ground) | |
| **15** | VccR | Receiver Power Supply +3.3 V±5%. | 6 |
| **16** | VccT | Transmitter Power Supply +3.3 V±5%. | 6 |
| **17** | VeeT | Transmitter Ground (Common with Receiver Ground) | |
| **18** | TD+ | Transmitter Non-Inverted DATA in. AC Coupled. | 7 |
| **19** | TD- | Transmitter Inverted DATA in. AC Coupled. | 7 |
| **20** | VeeT | Transmitter Ground (Common with Receiver Ground) | |

**Notes:**

1. TX Fault is open collector/drain output, which should be pulled up externally with a 4.7K – 10KΩ resistor on the host board to supply <VccT+0.3V or VccR+0.3V. When high, this output indicates a laser fault of some kind. Low indicates normal operation. In the low state, the output will be pulled to <0.8V.
2. TX Disable input is used to shut down the laser output per the state table below. It is pulled up within the module with a 4.7 –10K resistor. Low (0 – 0.8V): Transmitter on Between (0.8V and 2V): Undefined High (2.0 – VccT): Transmitter Disabled Open: Transmitter Disabled
3. Mod-Def 0, 1, 2. These are the module definition pins. They should be pulled up with a 4.7 - 10K resistor on the host board to supply less than VccT+0.3V or VccR+0.3V. Mod-Def 0, is grounded by the module to indicate that the module is present. Mod-Def 1 is clock line of two-wire serial interface for optional serial ID. Mod-Def 2 is data line of two-wire serial interface for optional serial ID.
4. LOS (Loss of signal) is an open collector/drain output, which should be pulled up externally with a

4.7 – 10K resistor on the host board to supply <VccT+0.3V or VccR+0.3V. When high, this output indicates the received optical power is below the worst-case receiver sensitivity (as defined by the standard in use). Low indicates normal operation. In the low state, the output will be pulled to<0.8V.

5. RD-/+: These are the differential receiver outputs. They are AC coupled 100Ω differential lines which should be terminated with 100Ω differential at the user SERDES. The AC coupling is done inside the module and thus not required on the host board.
6. VccR and VccT are the receiver and transmitter power supplies. They are defined as 3.3V±5% at the SFP connector pin. The in-rush current will typically be no more than 30mA above steady state supply current after 500ns.
7. TD-/+: These are the differential transmitter inputs. They are AC coupled differential lines with 100Ω differential termination inside the module. The AC coupling is done inside the module and is thus not required on host board.

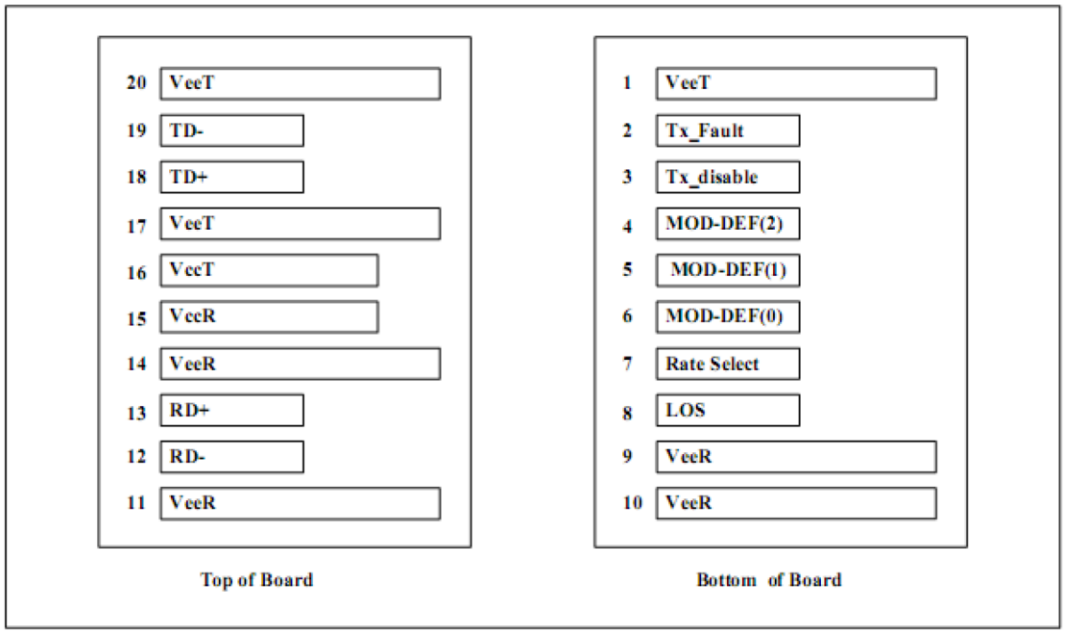


SFP Transceiver Electrical Pad Layout

**Block Diagram**

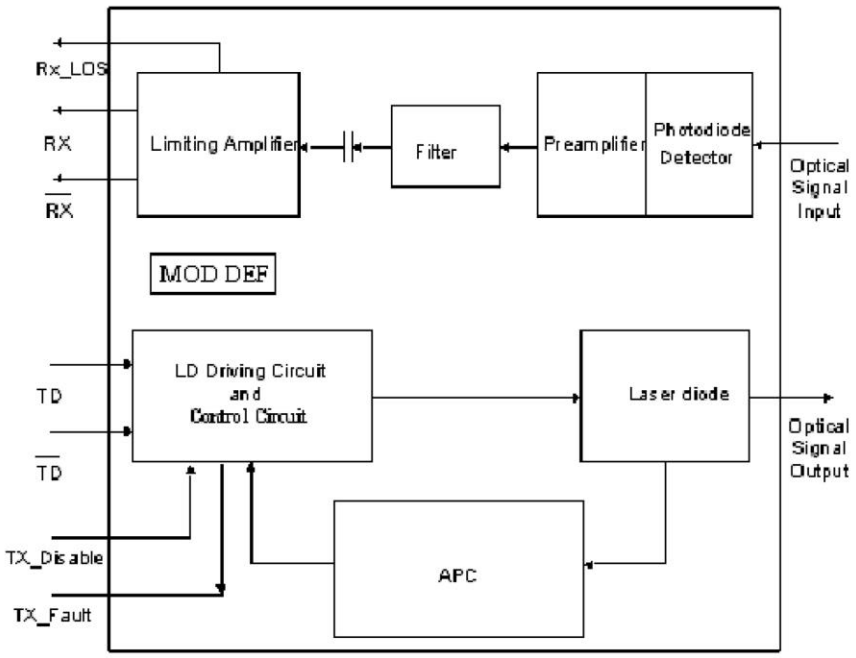


**Required Host Board Components**

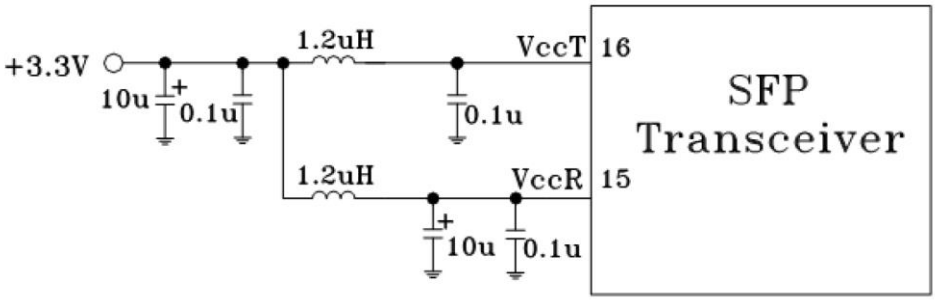


**Mechanical Specifications**

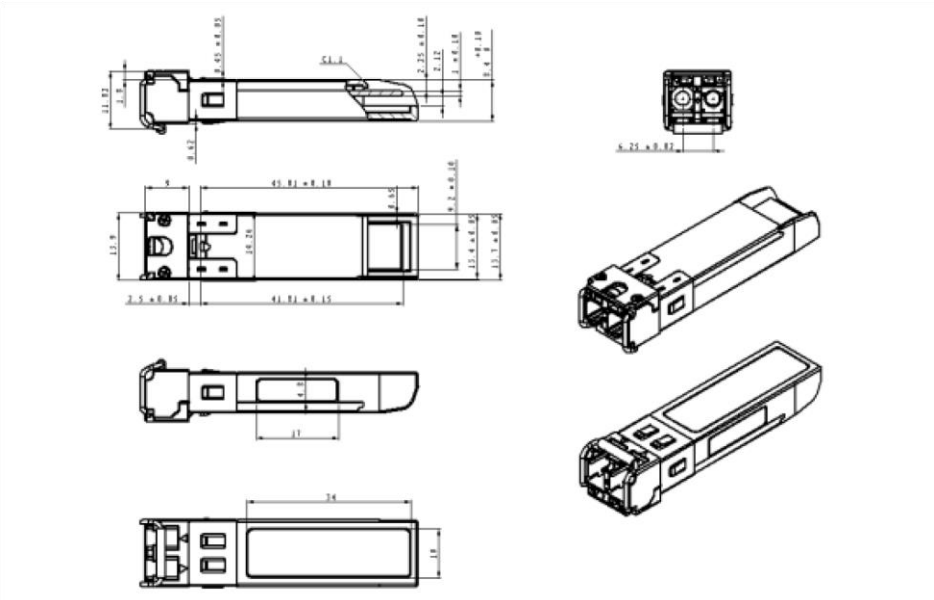

**EEPROM Information**

EEPROM memory map specific data field description is as below:

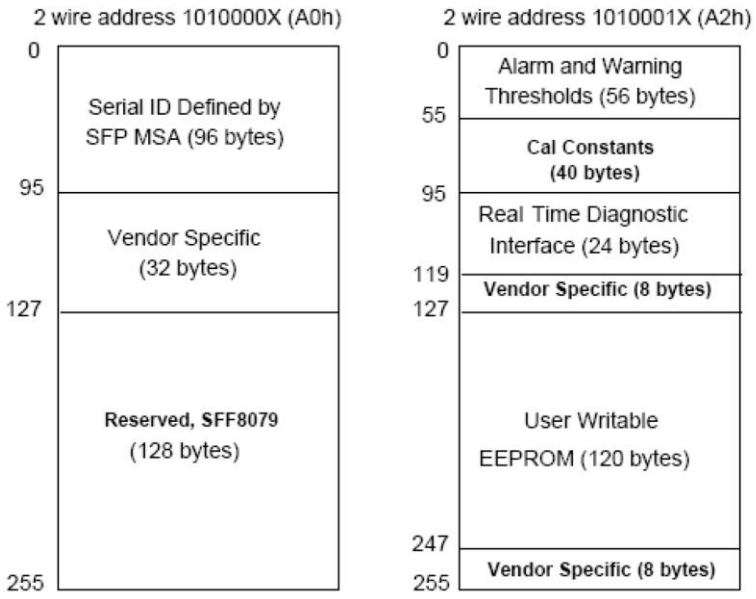


**Regulatory Compliance**

| Feature | Standard | Performance |
|---|---|---|
| **Electrostatic Discharge (ESD) to the Electrical Pins** | MIL-STD-883E Method 3015.7 | Class 1 (>500 V) Isolation with the case |
| **Electromagnetic Interference (EMI)** | FCC Part 15 Class B | Compatible with standards |
| **Laser Eye Safety** | FDA 21CFR 1040.10 and 1040.11<br>EN60950, EN (IEC) 60825-1,2 | Compatible with Class 1 laser product.<br>Compatible with TμV standards |
| **Component Recognition** | UL and CUL | UL file E317337 |
| **Environmental** | RoHS | RoHS6 |

**About AddOn Networks**

In 1999, AddOn Networks entered the market with a single product. Our founders fulfilled a severe shortage for compatible, cost-effective optical transceivers that compete at the same performance levels as leading OEM manufacturers. Adhering to the idea of redefining service and product quality not previously had in the fiber optic networking industry, AddOn invested resources in solution design, production, fulfillment, and global support.

Combining one of the most extensive and stringent testing processes in the industry, an exceptional free tech support center, and a consistent roll-out of innovative technologies, AddOn has continually set industry standards of quality and reliability throughout its history.

Reliability is the cornerstone of any optical fiber network and is ingrained in AddOn's DNA. It has played a key role in nurturing the long-term relationships developed over the years with customers. AddOn remains committed to exceeding industry standards with certifications ranging from NEBS Level 3 to ISO 9001:2015 with every new development while maintaining the signature reliability of its products.




**U.S. Headquarters**

Email: sales@addonnetworks.com

Telephone: +1 877.292.1701

Fax: 949.266.9273

**Europe Headquarters**

Email: salesemea@addonnetworks.com

Telephone: +44 1285 842070