**3HE11239AA-80-AO**

Alcatel-Lucent Nokia® 3HE11239AA-80 Compatible TAA 100GBase-ZR4 QSFP28 Transceiver (SMF, 1295nm to 1309nm, 80km, LC, DOM)

**Features:**

- Compliant with IEEE 802.3ba, ITU-T G.959
- Single 3.3V Power Supply
- Compliant with 4x28G (CEI-28G-VSR)
- Transmitter: cooled 4x25Gbps LAN WDM EML TOSA
- Receiver: 4x25Gbps SOA+PIN ROSA
- Maximum Power Consumption of 5.5W
- Hot-pluggable QSFP28 MSA form factor
- 4x25G Electrical Interface
- Single-mode Fiber
- Duplex LC Connector
- Commercial Temperature 0 to 70 Celsius
- RoHS Compliant and Lead Free



**Applications:**

- 100GBase Ethernet
- Access and Enterprise

**Product Description**

This Alcatel-Lucent Nokia® 3HE11239AA-80 compatible QSFP28 transceiver provides 100GBase-ZR4 throughput up to 80km over single-mode fiber (SMF) using a wavelength of 1295nm to 1309nm via an LC connector. It can operate at temperatures between 0 and 70C. Our transceiver is built to meet or exceed OEM specifications and is guaranteed to be 100% compatible with Alcatel-Lucent Nokia®. It has been programmed, uniquely serialized, and tested for data-traffic and application to ensure that it will initialize and perform identically. All of our transceivers comply with Multi-Source Agreement (MSA) standards to provide seamless network integration. Additional product features include Digital Optical Monitoring (DOM) support which allows access to real-time operating parameters. This transceiver is Trade Agreements Act (TAA) compliant. We stand behind the quality of our products and proudly offer a limited lifetime warranty.

AddOn's transceivers are RoHS compliant and lead-free.

TAA refers to the Trade Agreements Act (19 U.S.C. & 2501-2581), which is intended to foster fair and open international trade. TAA requires that the U.S. Government may acquire only "U.S.-made or designated country end products."

TAA COMPLIANT

**Absolute Maximum Ratings**

| Parameter | Symbol | Min. | Typ. | Max. | Unit |
|---|---|---|---|---|---|
| **Supply Voltage** | Vcc | -0.5 | | 3.6 | V |
| **Storage Temperature** | Tstg | -40 | | 85 | ºC |
| **Operating Case Temperature** | Tc | 0 | | 70 | ºC |
| **Relative Humidity** | RH | 5 | | 85 | % |
| **Rx Damage Threshold Per Lane** | THd | 5.5 | | | dBm |
| **Data Rate** | DR | | 25.78125 | | Gbps |
| **Link Distance with G.652 (With FEC)** | D1 | | | 80 | km |

**Electrical Characteristics**

| Parameter | Symbol | Min. | Typ. | Max. | Unit | Notes |
|---|---|---|---|---|---|---|
| **Supply Voltage** | Vcc | 3.135 | 3.3 | 3.465 | V | |
| **Supply Current** | Icc | | | 1.66 | A | |
| **Power Consumption** | | | | 5.5 | W | |
| **Transmitter** | | | | | | |
| **Input Differential Impedance** | RIN | | 100 | | Ω | 1 |
| **Differential Data Input Swing** | VIN,pp | 180 | | 1000 | mV | |
| **Transmit Disable Voltage** | VD | Vcc-1.3 | | Vcc | V | |
| **Transmit Enable Voltage** | VEN | Vee | | Vee+0.8 | V | 2 |
| **Receiver** | | | | | | |
| **Differential Data Output Swing** | VOUT,pp | 300 | | 850 | mV | 3 |
| **LOS Fault** | VLOS Fault | Vcc-1.3 | | Host_Vcc | V | 4 |
| **LOS Normal** | VLOS Normal | Vee | | Vee+0.8 | V | 4 |

**Notes:**

1. Connected directly to the Tx data input pins. AC coupled thereafter.
2. Optional for Tx disable.
3. Into 100Ω differential termination.
4. Loss of Signal is LVTTL. “Logic 0” indicates normal operation. “Logic 1” indicates no signal detected.
5. Tested under recommended operating conditions, unless otherwise noted.

**Optical Characteristics**

| Parameter | | Symbol | Min. | Typ. | Max. | Unit | Notes |
|---|---|---|---|---|---|---|---|
| **Transmitter** | | | | | | | |
| **Center Wavelength** | **Lane 0** | λ0 | 1294.53 | 1295.56 | 1296.59 | nm | |
| | **Lane 1** | λ1 | 1299.02 | 1300.05 | 1301.09 | nm | |
| | **Lane 2** | λ2 | 1301.54 | 1304.58 | 1305.63 | nm | |
| | **Lane 3** | λ3 | 1308.09 | 1309.14 | 1310.19 | nm | |
| **Total Launch Power (100GE)** | | Pavg | 7 | | 12.5 | dBm | 1 |
| **Average Launch Power Per Lane (100GE)** | | PLane | 1 | | 6.5 | dBm | 1 |
| **Difference in Launch Power Between Lanes** | | PΔ | | | 3 | dB | |
| **Average Laser Output Power (Laser Off)** | | Poff | | | -30 | dBm | |
| **Side-Mode Suppression Ratio** | | SMSR | 30 | | | dB | |
| **Extinction Ratio (100GE & OTU4)** | | ER | 6 | | | dB | |
| **Receiver** | | | | | | | |
| **Center Wavelength** | **Lane 0** | λ0 | 1294.53 | 1295.56 | 1296.59 | nm | |
| | **Lane 1** | λ1 | 1299.02 | 1300.05 | 1301.09 | nm | |
| | **Lane 2** | λ2 | 1301.54 | 1304.58 | 1305.63 | nm | |
| | **Lane 3** | λ3 | 1308.09 | 1309.14 | 1310.19 | nm | |
| **Damage Threshold** | | PDAM | | | 5.5 | dBm | |
| **Average Rx Power Per Lane** | | PRX_Lane | -28 | | 4.5 | dBm | |
| **Receiver Sensitivity Per Lane (OMA)** | | | | | -26.4 | dBm | 2 |
| **LOS Assert** | | LOSA | -40 | | | dBm | |
| **LOS De-Assert** | | LOSD | | | -29 | dBm | |
| **LOS Hysteresis** | | LOSH | 0.5 | | | dB | |

**Notes:**

1. The optical power is launched into SMF.
2. Measured with a PRBS $2^{31}$-1 test pattern @25.78125Gbps, BER≤$5E^{-5}$.

**Pin Descriptions**

| Pin | Logic | Symbol | Name/Description | Notes |
|---|---|---|---|---|
| **1** | | GND | Module Ground. | 1 |
| **2** | CML-I | Tx2- | Transmitter Inverted Data Input. | |
| **3** | CML-I | Tx2+ | Transmitter Non-Inverted Data Input. | |
| **4** | | GND | Module Ground. | 1 |
| **5** | CML-I | Tx4- | Transmitter Inverted Data Input. | |
| **6** | CML-I | Tx4+ | Transmitter Non-Inverted Data Input. | |
| **7** | | GND | Module Ground. | 1 |
| **8** | LVTTL-I | ModSelL | Module Select. | |
| **9** | LVTTL-I | ResetL | Module Reset. | |
| **10** | | VccRx | +3.3V Receiver Power Supply. | 2 |
| **11** | LVCMOS-I/O | SCL | 2-Wire Serial Interface Clock. | |
| **12** | LVCMOS-I/O | SDA | 2-Wire Serial Interface Data. | |
| **13** | | GND | Module Ground. | 1 |
| **14** | CML-O | Rx3+ | Receiver Non-Inverted Data Output. | |
| **15** | CML-O | Rx3- | Receiver Inverted Data Output. | |
| **16** | | GND | Module Ground. | 1 |
| **17** | CML-O | Rx1+ | Receiver Non-Inverted Data Output. | |
| **18** | CML-O | Rx1- | Receiver Inverted Data Output. | |
| **19** | | GND | Module Ground. | 1 |
| **20** | | GND | Module Ground. | 1 |
| **21** | CML-O | Rx2- | Receiver Inverted Data Output. | |
| **22** | CML-O | Rx2+ | Receiver Non-Inverted Data Output. | |
| **23** | | GND | Module Ground. | 1 |
| **24** | CML-O | Rx4- | Receiver Inverted Data Output. | |
| **25** | CML-O | Rx4+ | Receiver Non-Inverted Data Output. | |
| **26** | | GND | Module Ground. | 1 |
| **27** | LVTTL-O | ModPrsL | Module Present. | |
| **28** | LVTTL-O | IntL/RxLOSL | Interrupt. Optionally configurable as RxLOSL via the management interface (SFF-8636). | |
| **29** | | VccTx | +3.3V Transmitter Power Supply. | 2 |
| **30** | | Vcc1 | +3.3V Power Supply. | 2 |
| **31** | LVTTL-I | LPMode/TxDis | Low-Power Mode. Optionally configurable as TxDis via the management interface (SFF-8636). | |
| **32** | | GND | Module Ground. | 1 |
| **33** | CML-I | Tx3+ | Transmitter Non-Inverted Data Input. | |
| **34** | CML-I | Tx3- | Transmitter Inverted Data Input. | |

| | | | | |
|---|---|---|---|---|
| **35** | | GND | Module Ground. | 1 |
| **36** | CML-I | Tx1+ | Transmitter Non-Inverted Data. | |
| **37** | CML-I | Tx1- | Transmitter Inverted Data Input. | |
| **38** | | GND | Module Ground. | 1 |

**Notes:**

1. GND is the symbol for signal and supply (power) common for the module. All are common within the module, and all module voltages are referenced to this potential unless otherwise noted. Connect these directly to the host board signal-common ground plane.
2. VccRx, Vcc1, and VccTx are applied concurrently and may be internally connected within the module in any combination. Vcc contacts in SFF-8662 and SFF-8672 each have a steady state current rating of 1A.

**Electrical Pin-Out Details**

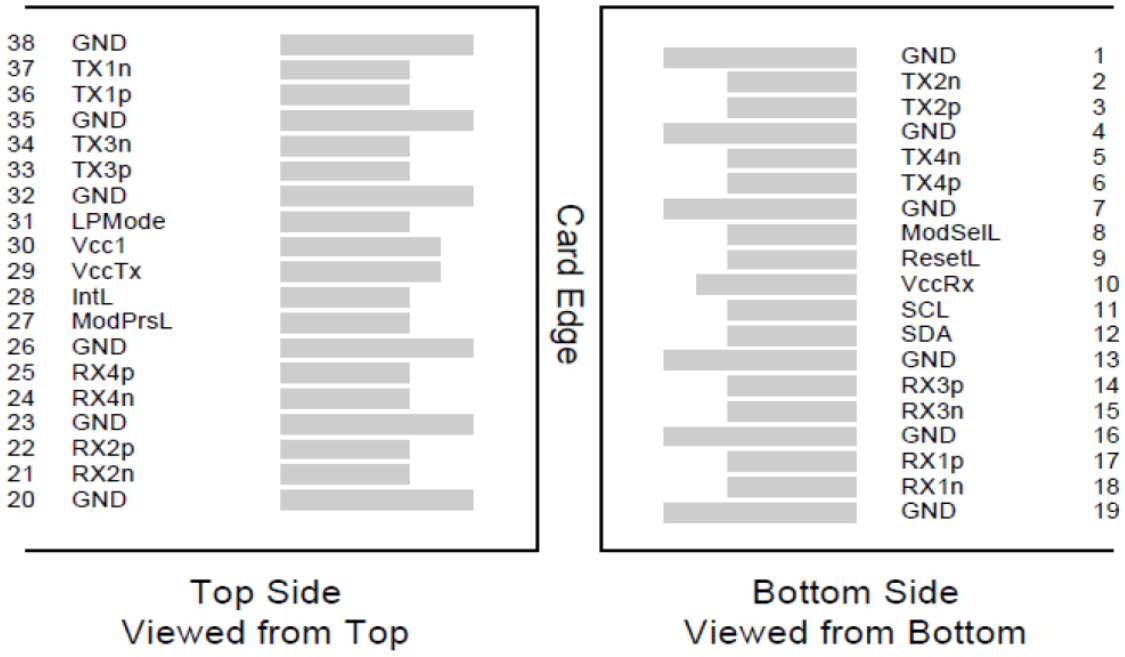

**Functional Diagram**

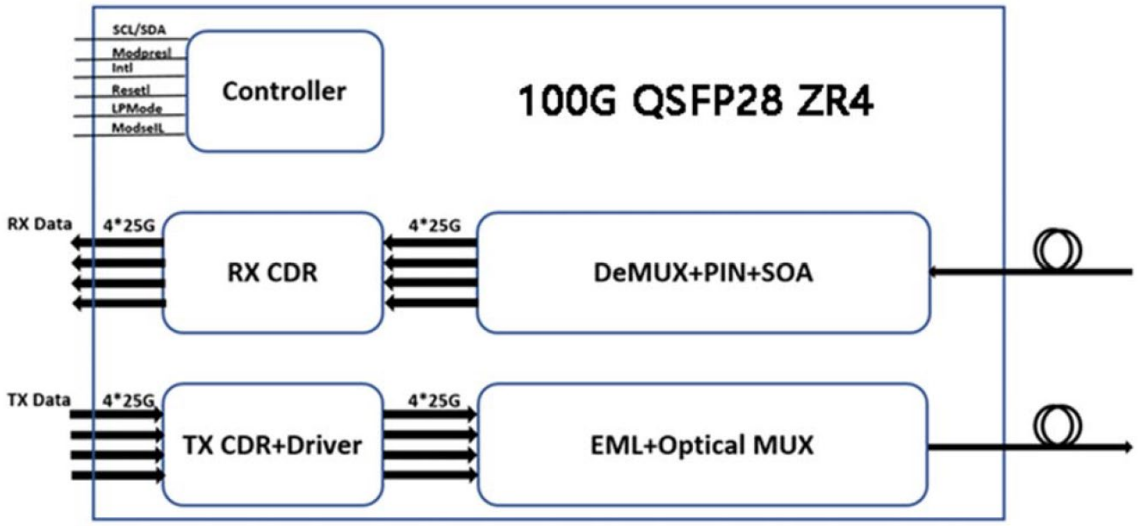


**Recommended Power Supply Filter**

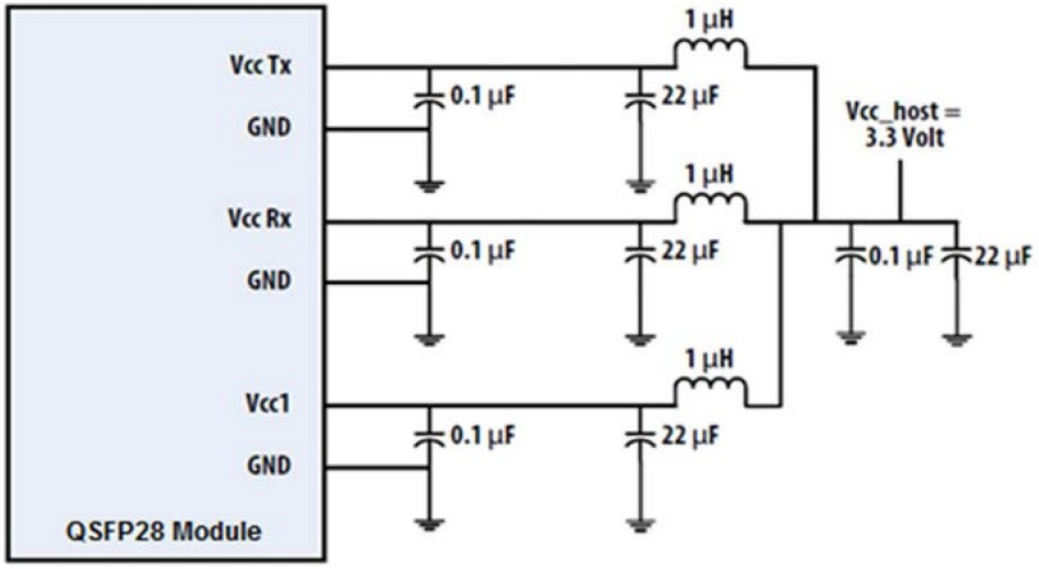

**Mechanical Specifications**

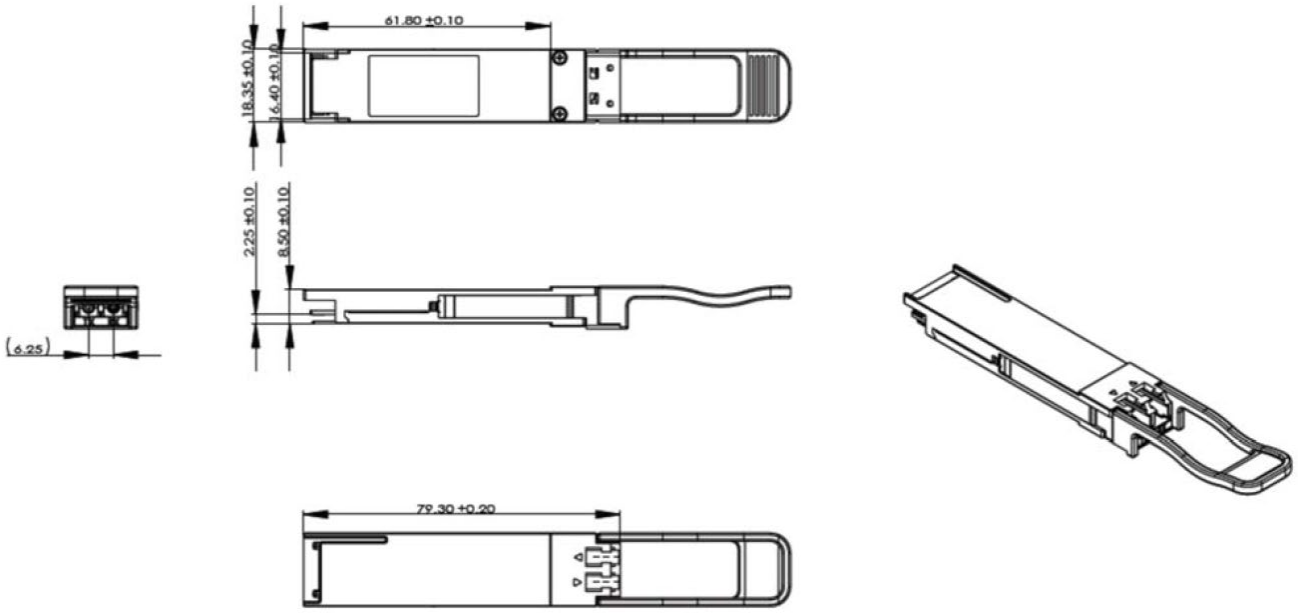

**About AddOn Networks**

In 1999, AddOn Networks entered the market with a single product. Our founders fulfilled a severe shortage for compatible, cost-effective optical transceivers that compete at the same performance levels as leading OEM manufacturers. Adhering to the idea of redefining service and product quality not previously had in the fiber optic networking industry, AddOn invested resources in solution design, production, fulfillment, and global support.

Combining one of the most extensive and stringent testing processes in the industry, an exceptional free tech support center, and a consistent roll-out of innovative technologies, AddOn has continually set industry standards of quality and reliability throughout its history.

Reliability is the cornerstone of any optical fiber network and is ingrained in AddOn's DNA. It has played a key role in nurturing the long-term relationships developed over the years with customers. AddOn remains committed to exceeding industry standards with certifications ranging from NEBS Level 3 to ISO 9001:2015 with every new development while maintaining the signature reliability of its products.




**U.S. Headquarters**

Email: sales@addonnetworks.com

Telephone: +1 877.292.1701

Fax: 949.266.9273

**Europe Headquarters**

Email: salesemea@addonnetworks.com

Telephone: +44 1285 842070