3FE25772AB-I-AO

Alcatel-Lucent Nokia® Compatible TAA 1000Base-BX SFP Transceiver (SMF, 1490nmTx/1310nmRx, 10km, LC, DOM, -40 to 85C)

Features:

- INF-8074 and SFF-8472 Compliance
- Simplex LC Connector
- Industrial Temperature -40 to 85 Celsius
- Single-mode Fiber
- Hot Pluggable
- Excellent ESD Protection
- Metal with Lower EMI
- RoHS Compliant and Lead Free



Applications:

- 1x Fibre Channel
- 1000Base-BX Ethernet
- Access (FTTx) and Enterprise

Product Description

This Alcatel-Lucent Nokia® compatible SFP transceiver provides 1000Base-BX throughput up to 10km over single-mode fiber (SMF) using a wavelength of 1490nmTx/1310nmRx via an LC connector. This bidirectional unit must be used with another transceiver or network appliance of complementing wavelengths. It is capable of withstanding -40 to 85C environments and can operate at temperatures between -40 and 85C. Our transceiver is built to meet or exceed OEM specifications and is guaranteed to be 100% compatible with Alcatel-Lucent Nokia®. It has been programmed, uniquely serialized, and tested for data-traffic and application to ensure that it will initialize and perform identically. All of our transceivers comply with Multi-Source Agreement (MSA) standards to provide seamless network integration. This transceiver is Trade Agreements Act (TAA) compliant. We stand behind the quality of our products and proudly offer a limited lifetime warranty.

AddOn's transceivers are RoHS compliant and lead-free.

TAA refers to the Trade Agreements Act (19 U.S.C. & 2501-2581), which is intended to foster fair and open international trade. TAA requires that the U.S. Government may acquire only "U.S.-made or designated country end products."

TAA COMPLIANT

Regulatory Compliance

- ESD to the Electrical PINs: compatible with MIL-STD-883E Method 3015.4
- ESD to the LC Receptacle: compatible with IEC 61000-4-3
- EMI/EMC compatible with FCC Part 15 Subpart B Rules, EN55022:2010
- Laser Eye Safety compatible with FDA 21CFR, EN60950-1& EN (IEC) 60825-1,2
- RoHS compliant with EU RoHS 2.0 directive 2015/863/EU

Absolute Maximum Ratings

Parameter	Symbol	Min.	Typ.	Max.	Unit	Notes
Maximum Supply Voltage	Vcc	-0.5		4.0	V	1
Storage Temperature	TS	-40		85	°C	2
Operating Case Temperature	Tc	-40		+85	°C	
Operating Humidity	RH	5		85	%	
Bit Error Rate	BER			10^{-12}		
Data Rate	DR		1.25		Gbps	3
	DR		1.062		Gbps	4

Notes:

1. For electrical power interface
2. Ambient temperature
3. IEEE 802.3
4. FC-PI-2 Rev7.0

Electrical Characteristics (VCC=3.14V to 3.46V, TC=-40 ◦C to +85 ◦C)

Parameter	Symbol	Min.	Typ.	Max.	Unit	Notes
Power Supply Voltage	Vcc	3.14	3.3	3.46	V	
Power Supply Current	Icc		200	300	mA	1
Transmitter						
Input differential impedance	R_{IN}		100		Ω	
Single ended data input swing	V_{IN_PP}	250		1200	mV	
Transmit disable voltage	V_D	V_{CC}-1.3		V_{CC}	V	
Transmit enable voltage	V_{EN}	V_{EE}		V_{EE}+0.8	V	
Transmit disable assert time				10	*μ*s	
Receiver						
Single ended data output swing	V_{OUT_PP}	300	400	800	mV	
Data output rise/fall time (20%-80%)	t_r/t_f			300	ps	
LOS Assert	V_{LOS_A}	V_{CC}-0.5		V_{CC_HOST}	V	
LOS De-Assert	V_{LOS_D}	V_{EE}		V_{EE}+0.5	V	

Notes:

1. For electrical power interface

Optical Characteristics

Parameter	Symbol	Min.	Typ.	Max.	Unit	Notes
Transmitter						
Output Optical Power	P_{TX}	-9		-3	dBm	1
Optical Center Wavelength	λ_C	1470	1490	1510	nm	
Optical Modulation Amplitude	OMA	174			μW	2
Extinction Ratio	ER	9			dB	
Spectral Width (-20dB)	$\Delta\lambda$			1	nm	
Side Mode Suppression Ratio	SMSR	30				
Optical Rise/Fall Time (20%-80%)	t_r/t_f		150	260	ps	
Relative Intensity Noise	RIN			-120	dB/Hz	
Deterministic Jitter Contribution	DJ		30	60	ps	
Total Jitter Contribution	TJ		60	120	ps	
Receiver						
Receiver Overload	P_{OL}	-3			dBm	
Optical Center Wavelength	λ_C	1260		1360	nm	
Receiver Sensitivity @ 1.063Gb/s	R_{X_SEN1}			-19.5	dBm	3
Receiver Sensitivity @ 1.25Gb/s	R_{X_SEN2}			-19.5	dBm	4
Optical Return Loss	ORL	14			dB	
Optical Isolation	ISO	35			dB	
LOS Assert	LOS_A	-30			dBm	
LOS De-Assert	LOS_D			-24	dBm	
LOS Hysteresis	LOS_H	0.5			dB	

Notes:

1. Class 1 Product
2. Equivalent extinction ratio specification for FC
3. FC-PI-2 Rev7.0 2.
4. IEEE 802.3

Pin Descriptions

Pin	Symbol	Name/Descriptions	Ref.
1	V_{EET}	Transmitter ground (common with receiver ground)	1
2	TX_FAULT	Transmitter Fault. Not supported	
3	TX_DISABLE	Transmitter Disable. Laser output disabled on high or open	2
4	MOD_DEF(2)	Module Definition 2. Data line for serial ID	3
5	MOD_DEF(1)	Module Definition 1. Clock line for serial ID	3
6	MOD_DEF(0)	Module Definition 0. Grounded within the module	3
7	Rate Select	No connection required	
8	LOS	Loss of Signal indication. Logic 0 indicates normal operation	4
9	V_{EER}	Receiver ground (common with transmitter ground)	1
10	V_{EER}	Receiver ground (common with transmitter ground)	1
11	V_{EER}	Receiver ground (common with transmitter ground)	1
12	RD-	Receiver Inverted DATA out. AC coupled	
13	RD+	Receiver Non-inverted DATA out. AC coupled	
14	V_{EER}	Receiver ground (common with transmitter ground)	1
15	V_{CCR}	Receiver power supply	
16	V_{CCT}	Transmitter power supply	
17	V_{EET}	Transmitter ground (common with receiver ground)	1
18	TD+	Transmitter Non-Inverted DATA in. AC coupled	
19	TD-	Transmitter Inverted DATA in. AC coupled	
20	V_{EET}	Transmitter ground (common with receiver ground)	1

Notes:

1. Circuit ground is isolated from chassis ground
2. Disabled: T_{DIS}>2Vor open, Enabled: T_{DIS}<0.8V
3. Should Be pulled up with 4.7k –10k ohm on host board to a voltage between 2V and 3.6V
4. LOS is open collector output



Pin-out of connector Block on Host board

Block Diagram of Transceiver

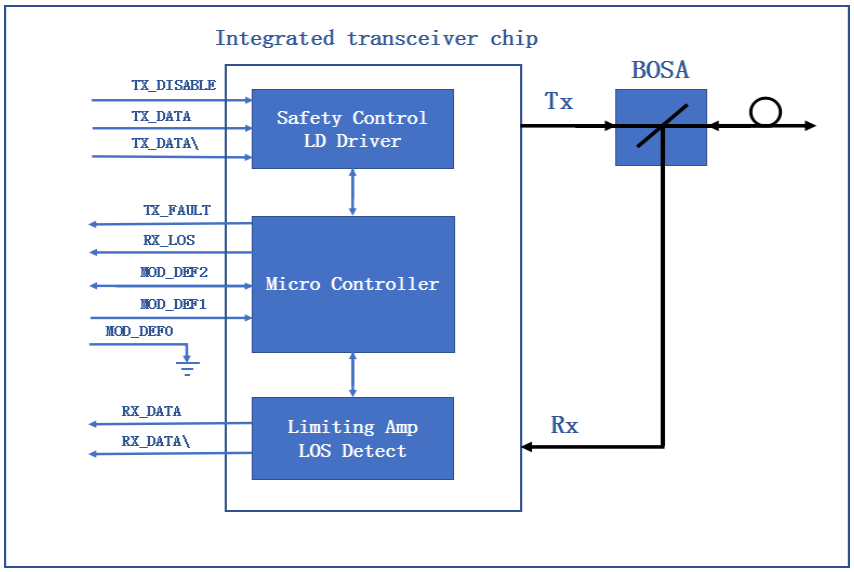

Mechanical Specifications

Small Form Factor Pluggable (SFP) transceivers are compatible with the dimensions defined by the SFP Multi-Sourcing Agreement (MSA).

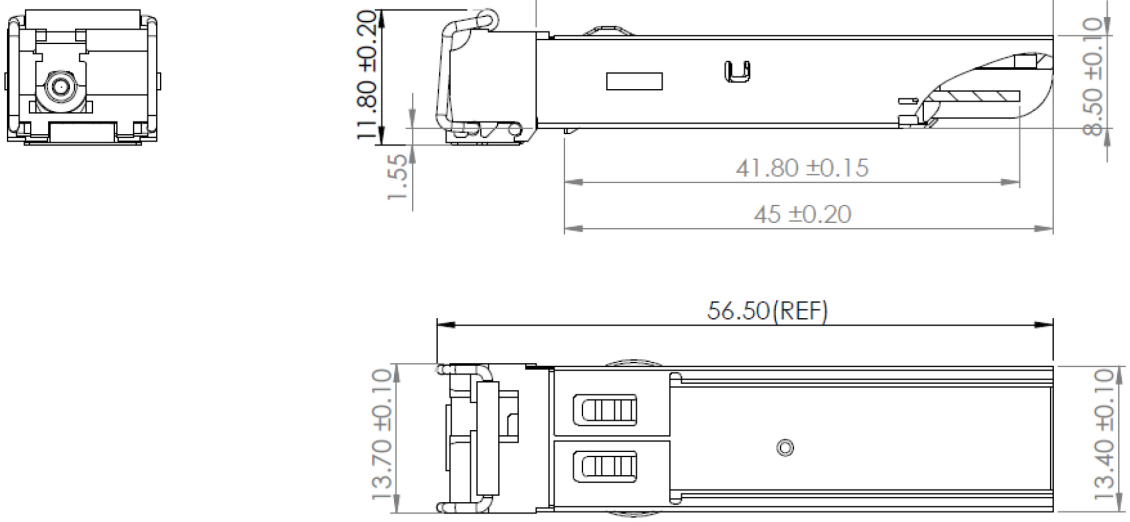

EEPROM Information

EEPROM memory map specific data field description is as below:

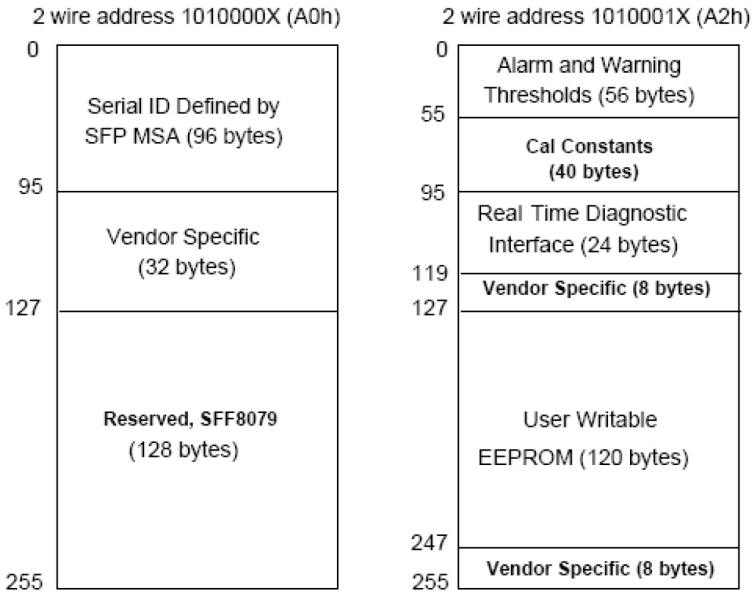

Digital Diagnostic Functions

This transceiver supports the 2-wire serial communication protocol as de- fined in SFP MSA. Digital diagnostic information is accessible over the 2-wire interface at the address 0xA2. Digital diagnostics are internally calibrated by default. The internal micro control unit accesses the device operating parameters in real time, such as transceiver temperature, laser bias current, transmitted optical power, received optical power and transceiver supply voltage. The module implements the alarm function of the SFP MSA, alerts the user when a particular operating parameter exceeds the factory-set normal range.

Parameter	Symbol	Accuracy	Report Range		Unit	Notes
Temperature	Temp	±3	-40	95	°C	
Voltage	V_{CC}	±0.1	2.7	3.9	V	
Bias Current	Ibias	±10	1	80	mA	
Tx Power	P_{TX}	±3	-12	2	dBm	
Rx Power	P_{RX}	±3	-30	0	dBm	

About AddOn Networks

In 1999, AddOn Networks entered the market with a single product. Our founders fulfilled a severe shortage for compatible, cost-effective optical transceivers that compete at the same performance levels as leading OEM manufacturers. Adhering to the idea of redefining service and product quality not previously had in the fiber optic networking industry, AddOn invested resources in solution design, production, fulfillment, and global support.

Combining one of the most extensive and stringent testing processes in the industry, an exceptional free tech support center, and a consistent roll-out of innovative technologies, AddOn has continually set industry standards of quality and reliability throughout its history.

Reliability is the cornerstone of any optical fiber network and is ingrained in AddOn's DNA. It has played a key role in nurturing the long-term relationships developed over the years with customers. AddOn remains committed to exceeding industry standards with certifications ranging from NEBS Level 3 to ISO 9001:2015 with every new development while maintaining the signature reliability of its products.



U.S. Headquarters

Email: sales@addonnetworks.com

Telephone: +1 877.292.1701

Fax: 949.266.9273

Europe Headquarters

Email: salesemea@addonnetworks.com

Telephone: +44 1285 842070