3HE00868CAA-BX35-SC-AO

Alcatel-Lucent Nokia® Compatible TAA 1000Base-BX SFP Transceiver (SMF, 1310nmTx/1550nmRx, 20km, SC, DOM)

Features:

- INF-8074 and SFF-8472 Compliance
- Simplex SC Connector
- Commercial Temperature 0 to 70 Celsius
- Single-mode Fiber
- Hot Pluggable
- Excellent ESD Protection
- Metal with Lower EMI
- RoHS Compliant and Lead Free



Applications:

- 1x Fibre Channel
- 1000Base-BX Ethernet
- Access (FTTx) and Enterprise

Product Description

This Alcatel-Lucent Nokia® compatible SFP transceiver provides 1000Base-BX throughput up to 20km over single-mode fiber (SMF) using a wavelength of 1310nmTx/1550nmRx via an SC connector. This bidirectional unit must be used with another transceiver or network appliance of complementing wavelengths. It can operate at temperatures between 0 and 70C. Our transceiver is built to meet or exceed OEM specifications and is guaranteed to be 100% compatible with Alcatel-Lucent Nokia®. It has been programmed, uniquely serialized, and tested for data-traffic and application to ensure that it will initialize and perform identically. All of our transceivers comply with Multi-Source Agreement (MSA) standards to provide seamless network integration. Additional product features include Digital Optical Monitoring (DOM) support which allows access to real-time operating parameters. We stand behind the quality of our products and proudly offer a limited lifetime warranty.

AddOn's transceivers are RoHS compliant and lead-free.

TAA refers to the Trade Agreements Act (19 U.S.C. & 2501-2581), which is intended to foster fair and open international trade. TAA requires that the U.S. Government may acquire only "U.S.-made or designated country end products."

TAA COMPLIANT

Absolute Maximum Ratings

Parameter	Symbol	Min.	Typ.	Max.	Unit	Notes
Maximum Supply Voltage	Vcc	-0.5		3.6	V	
Storage Temperature	Tstg	-40		85	℃	
Operating Case Temperature	Tc	0		70	℃	
Relative Humidity	RH	5		85	%	
Power Supply Current	Icc			300	mA	

Electrical Characteristics

Parameter		Symbol	Min.	Typ.	Max.	Unit	Notes
Supply Voltage		Vcc	3.15	3.3	3.47	V	
9μm Core Diameter SMF		L		20		km	
Data Rate	**GBE**			1.25		Gbps	
	FC			1.063			
Transmitter							
LVPECL Differential Inputs		VIN	400		1800	mVp-p	1
Input Differential Impedance		ZIN	90	100	110	Ω	2
Tx_Disable	**Disable**		2		Vcc+0.3	V	
	Enable		0		0.8	V	
Tx_Fault	**Fault**		2		Vcc+0.3	V	
	Normal		0		0.8	V	
Receiver							
LVPECL Differential Outputs		VOUT	400		2000	mVp-p	3
Output Differential Impedance		ZOUT	90	100	110	Ω	
Tx_Disable Assert Time		T_off			10	us	
Rx_LOS	**Loss of Signal (LOS)**		2		Vcc+0.3	V	
	Normal Operation		0		0.8	V	
MOD_DEF(0.2)		VOH	2.5		Vcc+0.3	V	4
		VOL	0		0.5	V	

Notes:

1. AC coupled inputs. LVPECL logic. Internal AC coupling.
2. RIN > 100kΩ @ DC.
3. AC coupled outputs. LVPECL logic. Internal AC coupling.
4. With serial ID.

Optical Characteristics

Parameter	Symbol	Min.	Typ.	Max.	Unit	Notes
Transmitter						
Center Wavelength	λC	1290	1310	1330	nm	
Spectral Width (RMS)	Δλ			4	nm	
Average Output Power	POUT	-9		-3	dBm	1
Extinction Ratio	ER	9			dB	
Rise/Fall Time (20-80%)	Tr/Tf			0.26	ns	
POUT @ Tx_Disable Asserted	POUT			-35	dBm	
Output Optical Eye	Compliant with IEEE 802.3					2
Receiver						
Center Wavelength	λC	1530	1550	1570	nm	
Receiver Sensitivity	Pmin			-24	dBm	3
Receiver Overload	Pmax	-3			dBm	
LOS De-Assert	LOSD			-25	dBm	
LOS Assert	LOSA	-35			dBm	
LOS Hysteresis		1		4	dB	

Notes:

1. Output power is measured by coupling into a 9/125µm single-mode fiber.
2. Filtered. Measured with a PRBS 2^7-1 test pattern @1250Mbps.
3. Minimum average optical power is measured at BER less than $1E^{-12}$ with 2^7-1 PRBS and ER=9dB.

Pin Descriptions

Pin	Symbol	Name/Description	Plug Seq.	Note
1	VeeT	Transmitter Ground.	1	5
2	Tx_Fault	Transmitter Fault Indication.	3	1
3	Tx_Disable	Transmitter Disable. Module disables on “high” or “open.”	3	2
4	MOD_DEF2	Module Definition 2. 2-Wire Serial ID Interface.	3	3
5	MOD_DEF1	Module Definition 1. 2-Wire Serial ID Interface.	3	3
6	MOD_DEF0	Module Definition 0. 2-Wire Serial ID Interface.	3	3
7	Rate Select	Not Connected.	3	Function Not Available
8	LOS	Loss of Signal.	3	4
9	VeeR	Receiver Ground.	1	5
10	VeeR	Receiver Ground.	1	5
11	VeeR	Receiver Ground.	1	5
12	RD-	Inverse Received Data Out.	3	6
13	RD+	Received Data Out.	3	7
14	VeeR	Receiver Ground.	1	5
15	VccR	3.3 ± 5% Receiver Power.	2	7
16	VccT	3.3 ± 5% Transmitter Power.	2	7
17	VeeT	Transmitter Ground.	1	5
18	TD+	Transmitter Data In.	3	8
19	TD-	Inverse Transmitter Data In.	3	8
20	VeeT	Transmitter Ground.	1	5

Notes:

1. Tx_Fault is an open collector/drain output that should be pulled up with a 4.7kΩ to 10kΩ resistor on the host board. Pull-up voltage between 2.0V and VccT/R+0.3V. When “high,” output indicates a laser fault of some kind. “Low” indicates normal operation. In the "low" state, the output will be pulled to <0.8V.

2. Tx_Disable is an input that is used to shut down the transmitter optical output. It is pulled up within the module with a 4.7kΩ to 10kΩ resistor. Its states are:

   Low (0V–0.8V): Transmitter On.
   (>0.8, <2.0V): Undefined.
   High (2.0V–3.465V): Transmitter Disabled.
   Open: Transmitter Disabled.

3. MOD_DEF0, 1, and 2. These are the module definition pins. They should be pulled up with a 4.7kΩ to 10kΩ resistor on the host board. The pull-up voltage shall be VccT or VccR.

   MOD_DEF0 is grounded by the module to indicate that the module is present.
   MOD_DEF1 is the clock line of the 2-wire serial interface for serial ID.

MOD-DEF 2 is the data line of the 2-wire serial interface for serial ID.

4. LOS (Loss of Signal) is an open collector/drain output that should be pulled up with a 4.7kΩ to 10kΩ resistor. Pull-up voltage between 2.0V and VccT/R+0.3V. When “high,” this output indicates the received optical power is below the worst-case receiver sensitivity (as defined by the standard in use). “Low” indicates normal operation. In the “low” state, the output will be pulled to <0.8V.
5. VeeR and VeeT may be internally connected within the SFP module.
6. RD-/+. These are the differential receiver outputs. They are AC coupled 100kΩ (differential) lines that should be terminated with 100kΩ (differential) at the user SERDES. The AC coupling is done inside the module and is thus not required on the host board. The voltage swing on these lines will be between 400mV and 2000mV differential (200mV –1000mV single-ended) when properly terminated.
7. VccR and VccT are the receiver and transmitter power supplies. They are defined as 3.3V±5% at the SFP connector pin. Maximum supply current is 300mA. Recommended host board power supply filtering is shown below. Inductors with DC resistance of less than 1kΩ should be used in order to maintain the required voltage at the SFP input pin with 3.3V supply voltage. When the recommended supply-filtering network is used, hot-plugging of the SFP transceiver module will result in an in-rush current of no more than 30mA greater than the steady state value. VccR and VccT may be internally connected within the SFP transceiver module.
8. TD-/+. These are the differential transmitter inputs. They are AC-coupled, differential lines with 100 differential terminations inside the module. The AC coupling is done inside the module and is thus not required on the host board. The inputs will accept differential swings of 400mV-2000mV (200mV – 1000mV single-ended).

Electrical Pin-Out Details

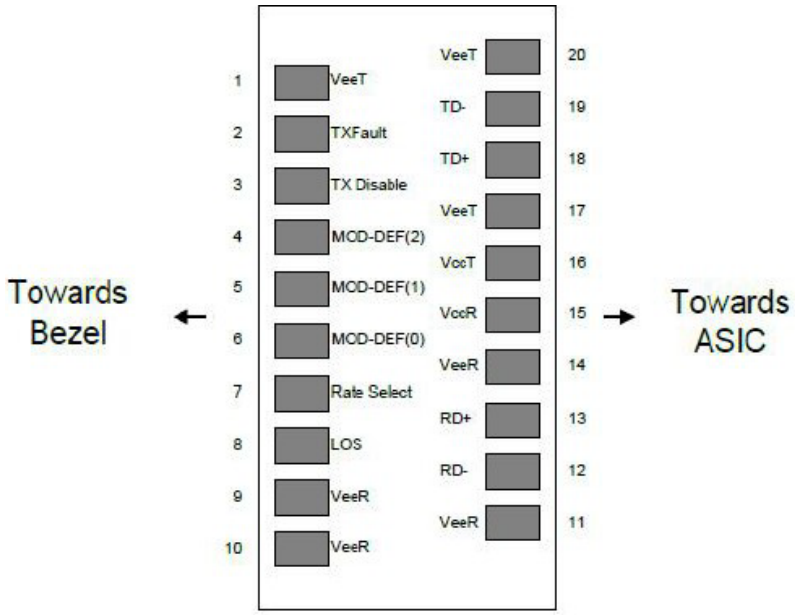

Recommended Application Interface Block Diagram

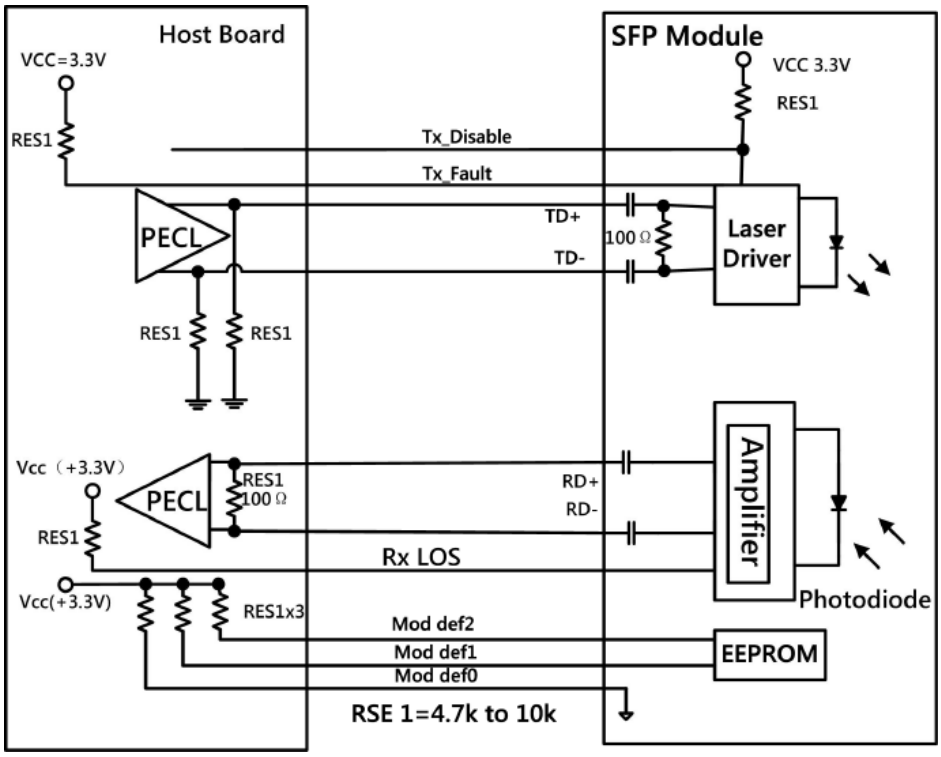

Mechanical Specifications

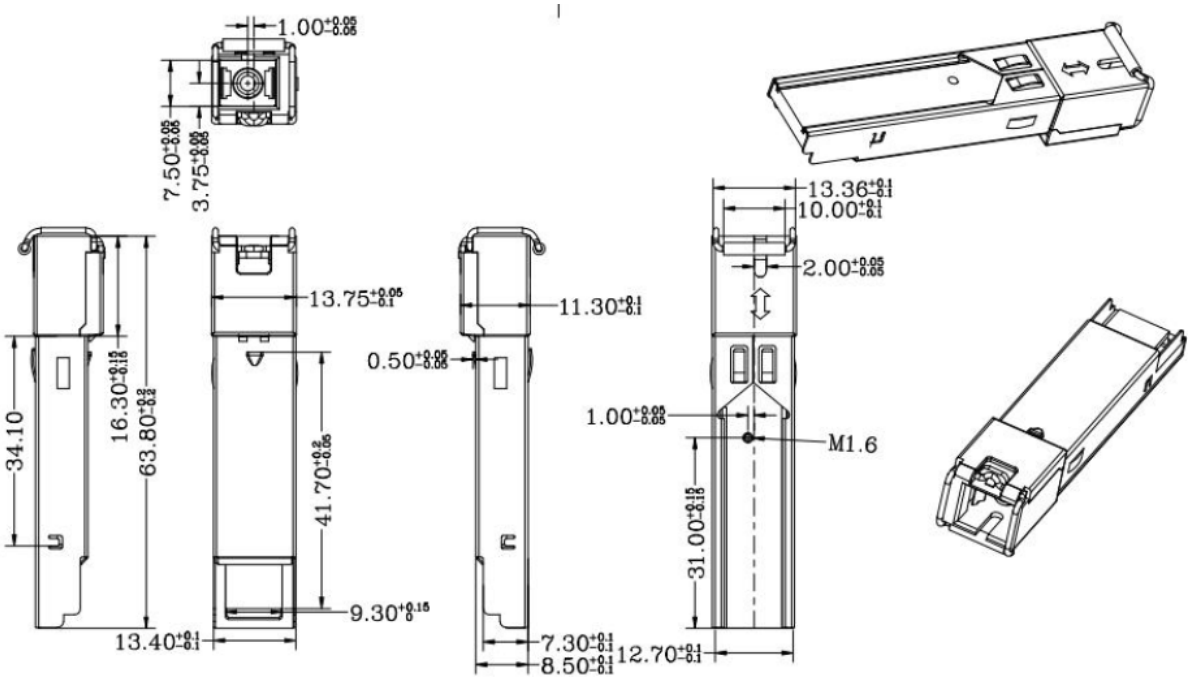

EEPROM Information

The serial interface uses the 2-wire serial CMOS EEPROM protocol defined. When the serial protocol is activated, the host generates the serial clock signal (SCL). The positive edge clocks data into those segments of the EEPROM that are not write protected within the SFP transceiver. The negative edge clocks data from the SFP transceiver. The serial data signal (SDA) is bi-directional for serial data transfer. The host uses SDA in conjunction with SCL to mark the start and end of serial protocol activation. The memories are organized as a series of 8-bit data words that can be addressed individually or sequentially. The module provides diagnostic information about the present operating conditions. The transceiver generates this diagnostic data by digitization of internal analog signals. Calibration and alarm/warning threshold data is written during device manufacture. Received power monitoring, transmitted power monitoring, bias current monitoring, supply voltage monitoring and temperature monitoring all are implemented. If the module is defined as external calibrated, the diagnostic data are raw A/D values and must be converted to real world units using calibration constants stored in EEPROM locations 56 – 95 at wire serial bus address A2h. The digital diagnostic memory map-specific data field define as following. For detailed EEPROM information please refer to the related document of SFF8472 Rev 10.2.

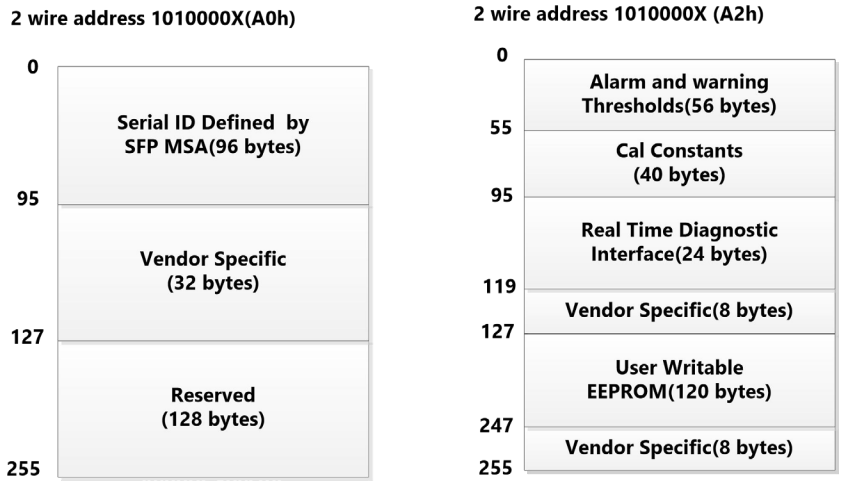

About AddOn Networks

In 1999, AddOn Networks entered the market with a single product. Our founders fulfilled a severe shortage for compatible, cost-effective optical transceivers that compete at the same performance levels as leading OEM manufacturers. Adhering to the idea of redefining service and product quality not previously had in the fiber optic networking industry, AddOn invested resources in solution design, production, fulfillment, and global support.

Combining one of the most extensive and stringent testing processes in the industry, an exceptional free tech support center, and a consistent roll-out of innovative technologies, AddOn has continually set industry standards of quality and reliability throughout its history.

Reliability is the cornerstone of any optical fiber network and is ingrained in AddOn's DNA. It has played a key role in nurturing the long-term relationships developed over the years with customers. AddOn remains committed to exceeding industry standards with certifications ranging from NEBS Level 3 to ISO 9001:2015 with every new development while maintaining the signature reliability of its products.



U.S. Headquarters

Email: sales@addonnetworks.com

Telephone: +1 877.292.1701

Fax: 949.266.9273

Europe Headquarters

Email: salesemea@addonnetworks.com

Telephone: +44 1285 842070