3FE28785AA-BX35-SC-AO

Alcatel-Lucent Nokia® Compatible TAA 1000Base-BX SFP Transceiver (SMF, 1310nmTx/1550nmRx, 40km, SC, DOM)

Features:

- Single-Mode Bi-Directional Transmission
- Hot-Pluggable
- SC Receptacle
- Single 3.3V Power Supply
- Excellent EMI and ESD Protection
- Up to 1.25Gbps Data Links
- Operating Temperature: 0 to 70 Celsius
- Laser Eye Safety Compliant
- Excellent ESD Protection
- RoHS Compliant and Lead-Free
- RoHS Compliant and Lead Free



Applications:

- 1000Base Ethernet
- Access and Enterprise

Product Description

This Alcatel-Lucent Nokia® compatible SFP transceiver provides 1000Base-BX throughput up to 40km over single-mode fiber (SMF) using a wavelength of 1310nmTx/1550nmRx via an SC connector. This bidirectional unit must be used with another transceiver or network appliance of complementing wavelengths. It can operate at temperatures between 0 and 70C. Our transceiver is built to meet or exceed OEM specifications and is guaranteed to be 100% compatible with Alcatel-Lucent Nokia®. It has been programmed, uniquely serialized, and tested for data-traffic and application to ensure that it will initialize and perform identically. All of our transceivers comply with Multi-Source Agreement (MSA) standards to provide seamless network integration. Additional product features include Digital Optical Monitoring (DOM) support which allows access to real-time operating parameters. We stand behind the quality of our products and proudly offer a limited lifetime warranty.

AddOn's transceivers are RoHS compliant and lead-free.

TAA refers to the Trade Agreements Act (19 U.S.C. & 2501-2581), which is intended to foster fair and open international trade. TAA requires that the U.S. Government may acquire only "U.S.-made or designated country end products."

TAA COMPLIANT

Absolute Maximum Ratings

Parameter	Symbol	Min.	Typ.	Max.	Unit	Notes
Data Rate	DR		1250		Mbps	
Storage Temperature	Tstg	-40		85	℃	
Operating Temperature	Tc	0		70	℃	
Input Voltage	Vcc	0		5	V	

Electrical Characteristics

Parameter		Symbol	Min.	Typ.	Max.	Unit	Notes
Power Supply Voltage		Vcc	3.0	3.3	3.6	V	
Power Supply Current		Icc		180	250	mA	
Transmitter							
Transmitter Differential Input Voltage		+/-TX_DAT	200		2400	mVp-p	
Tx_Disable Input Voltage	**Low**	VIL	0		0.8	V	
	High	VIH	2.0		Vcc	V	
Tx_Fault Output Voltage	**Low**	VOL	0		0.8	V	
	High	VOH	2.0		Vcc	V	
Receiver							
Receiver Differential Output Voltage		+/-RX_DAT	600		1400	mVp-p	
Rx_LOS Output Voltage	**Low**	VOL	0		0.8	V	
	High	VOH	2.0		Vcc	V	

Optical Characteristics

Parameter		Symbol	Min.	Typ.	Max.	Unit	Notes
Transmitter							
Centre Wavelength		λC	1290	1310	1330	nm	
Output Spectral Width		△λ (RMS)			4	nm	
Average Output Power		P_O	-5		0	dBm	
Extinction Ratio		ER	10			dB	
Data Input Voltage	**High**	V_{IHS}	Vcc-1.16		Vcc-0.89	V	
	Low	V_{ILS}	Vcc-1.82		Vcc-1.48	V	
Supply Current		Icc		90	110	mA	
Output Optical Eye		Compliant with ITU-T G.957					
Receiver							
Receive Sensitivity		P_{min}			-25	dBm	
Maximum Input Power		P_{max}	-3			dBm	
Signal Detection - Asserted		P_{H-L}	-35			dBm	
Signal Detection - De-Asserted		P_{L-H}			-26	dBm	
Output Voltage	**High**	VOH	Vcc-1.03		Vcc-0.89	V	
	Low	VOL	Vcc-1.82		Vcc-1.63	V	
Operating Wavelength		λC	1480	1550	1580	nm	
Supply Current		Icc		80	110	mA	

Pin Descriptions

Pin	Symbol	Name/Description	Plug Sequence	Notes
1	VeeT	Transmitter Ground.	1	
2	Tx_Fault	Transmitter Fault Indication.	3	1
3	Tx_Dis	Transmitter Disable. Module disables on “high” or “open.”	3	2
4	MOD_DEF (2)	SDA Serial Data Signal. 2-Wire Serial ID Interface.	3	3
5	MOD_DEF (1)	SCL Serial Clock Signal. 2-Wire Serial ID Interface.	3	3
6	MOD_DEF (0)	TTL Low. Grounded within the module.	3	3
7	Rate Select	Select between full or reduced receiver bandwidth. No connection required. “Low” = open-reduced bandwidth. “High” = full bandwidth.	3	
8	LOS	Loss of Signal Indication. “Logic 0” indicates normal operation.	3	5
9	VeeR	Receiver Ground.	1	6
10	VeeR	Receiver Ground.	1	6
11	VeeR	Receiver Ground.	1	6
12	RX-	Receiver Data Bar. Differential PECL. AC coupled.	3	7
13	RX+	Receiver Data. Differential PECL. AC coupled.	3	7
14	VeeR	Receiver Ground.	1	6
15	VccR	Receiver Power. 3.3V+5%.	2	8
16	VccT	Transmitter Power. 3.3V+5%.	2	8
17	VeeT	Transmitter Ground.	1	6
18	TX+	Receiver Data. Differential PECL. AC coupled.	3	9
19	TX-	Receiver Data Bar. Differential PECL. AC coupled.	3	9
20	VeeT	Transmitter Ground.	1	6

Notes:

1. Tx_Fault is an open collector/drain output that should be pulled up with a 4.7kΩ to 10kΩ resistor on the host board. Pull-up voltage between 2.0V and VccT/R+0.3V. When “high,” output indicates a laser fault of some kind. “Low” indicates normal operation. In the “low” state, the output will be pulled to <0.8V.
2. Tx_Disable is an input that is used to shut down the transmitter optical output. It is pulled up within the module with a 4.7kΩ to 10kΩ resistor. Its states are:
   Low (0V to 0.8V): Transmitter On
   (>0.8V, <2.0V): Undefined
   High (2.0V to 3.465V): Transmitter Disabled
   Open: Transmitter Disabled.
3. MOD_DEF0, 1, & 2. These are the module definition pins. They should be pulled up with a 4.7kΩ to 10kΩ resistor on the host board. The pull-up voltage shall be VccT or VccR.
   MOD_DEF0 is grounded by the module to indicate that the module is present.
   MOD_DEF1 is the clock line of the 2-wire serial interface for serial ID.
   MOD_DEF2 is the data line of the 2-wire serial interface for serial ID.
4. This is an optional input used to control the receiver bandwidth for compatibility with multiple data rates (most likely Fibre Channel 1x and 2x rates). If implemented, the input will be internally pulled down with >30k resistor. The input states are:
   Low (0V to 0.8V): Reduced Bandwidth
   (>0.8V, <2.0V): Undefined
   High (2.0V to 3.465V): Full Bandwidth

Open: Reduced Bandwidth.

5. LOS (Loss of Signal) is an open collector/drain output that should be pulled up with a 4.7kΩ to 10kΩ resistor. Pull-up voltage between 2.0V and VccT/R+0.3V. When “high,” this output indicates that the received optical power is below the worst-case receiver sensitivity (as defined by the standard in use). “Low” indicates normal operation. In the “low” state, the output will be pulled to <0.8V.
6. VeeR and VeeT may be internally connected within the SFP module.
7. RD-/+. These are the differential receiver outputs. They are AC-coupled, 100 differential lines that should be terminated with 100 (differential) at the user SERDES. The AC coupling is done inside the module and is thus not required on the host board. The voltage swing on these lines will be between 370mV and 2000mV differential (185mV to 1000mV single-ended) when properly terminated.
8. VccR and VccT are the receiver and transmitter power supplies. They are defined as 3.3V±5% at the SFP connector pin. Maximum supply current is 300mA. Recommended host board power supply filtering is shown below. Inductors with DC resistance of less than 1Ω should be used in order to maintain the required voltage at the SFP input pin with 3.3V supply voltage. When the recommended supply-filtering network is used, hot-plugging of the SFP transceiver module will result in an in-rush current of no more than 30mA greater than the steady state value. VccR and VccT may be internally connected within the SFP transceiver module.
9. TD-/+. These are the differential transmitter inputs. They are AC-coupled, differential lines with 100 differential terminations inside the module. The AC coupling is done inside the module and is thus not required on the host board. The inputs will accept differential swings of 500mV to 2400mV (250mV to 1200mV single-ended), though it is recommended that values between 500mV and 1200mV differential (250mV to 600mV single-ended) be used for best EMI performance.

Pin-Out Details

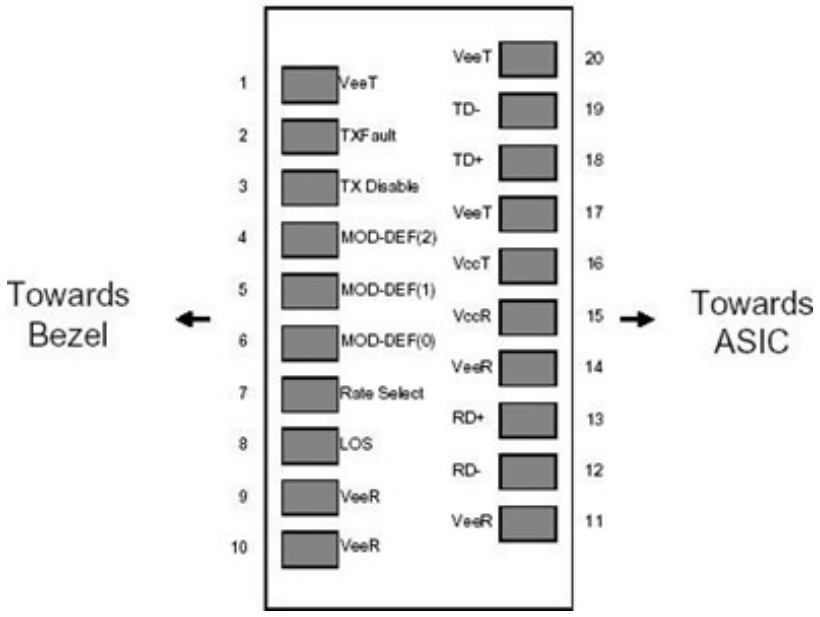

Block Diagram of Transceiver

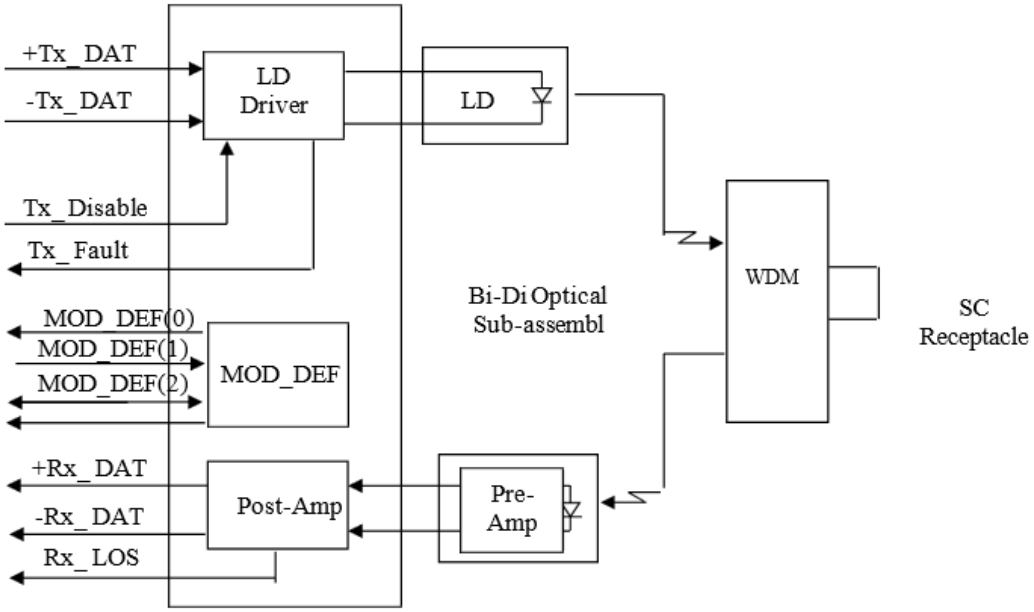

Recommended Circuit

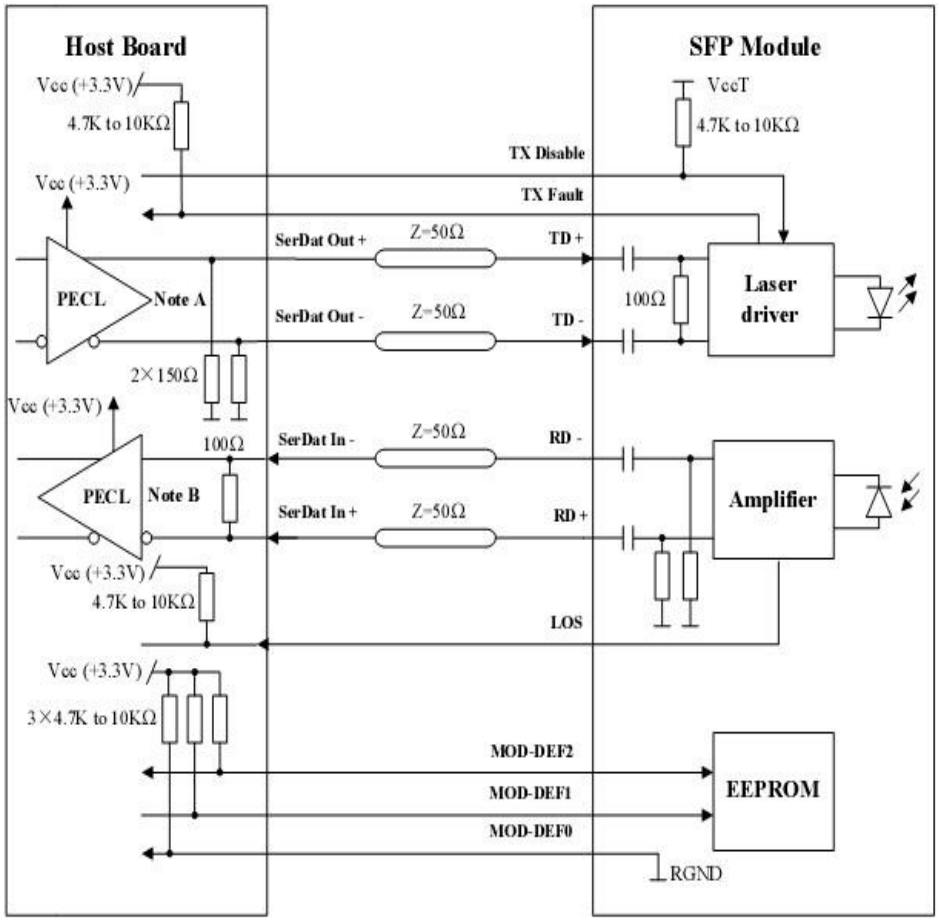

Note A: Circuit assumes open emitter output

Note B: Circuit assumes high impedance internal bias @Vcc-1.3V

Mechanical Specifications

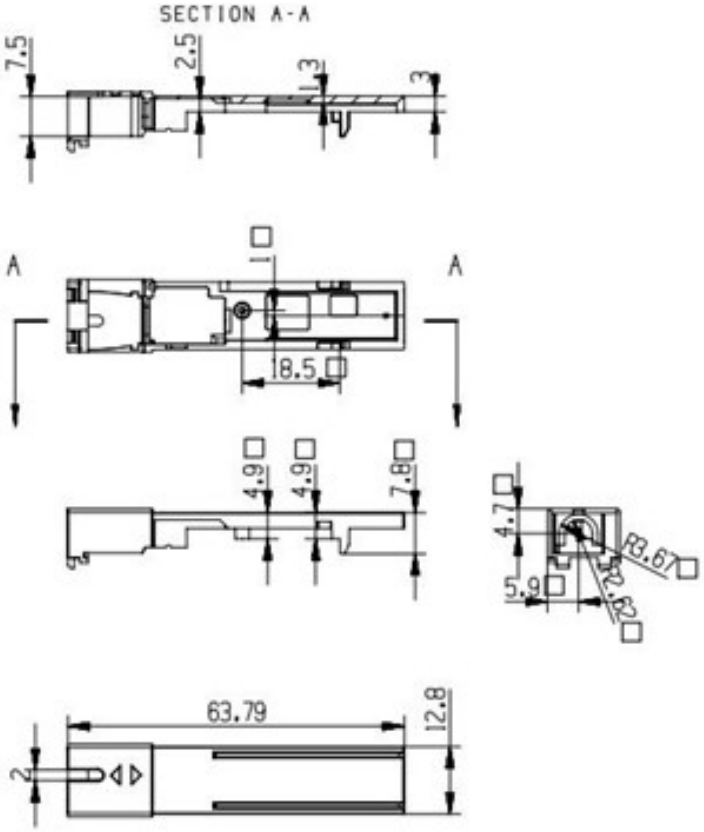

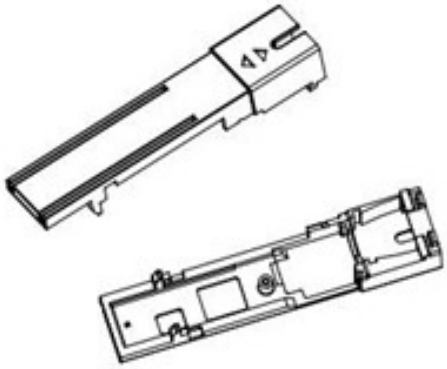

About AddOn Networks

In 1999, AddOn Networks entered the market with a single product. Our founders fulfilled a severe shortage for compatible, cost-effective optical transceivers that compete at the same performance levels as leading OEM manufacturers. Adhering to the idea of redefining service and product quality not previously had in the fiber optic networking industry, AddOn invested resources in solution design, production, fulfillment, and global support.

Combining one of the most extensive and stringent testing processes in the industry, an exceptional free tech support center, and a consistent roll-out of innovative technologies, AddOn has continually set industry standards of quality and reliability throughout its history.

Reliability is the cornerstone of any optical fiber network and is ingrained in AddOn's DNA. It has played a key role in nurturing the long-term relationships developed over the years with customers. AddOn remains committed to exceeding industry standards with certifications ranging from NEBS Level 3 to ISO 9001:2015 with every new development while maintaining the signature reliability of its products.



U.S. Headquarters

Email: sales@addonnetworks.com

Telephone: +1 877.292.1701

Fax: 949.266.9273

Europe Headquarters

Email: salesemea@addonnetworks.com

Telephone: +44 1285 842070