3AL82081AA-AO

Alcatel-Lucent Nokia® 3AL82081AA Compatible TAA 1000Base-CWDM SFP Transceiver (SMF, 1510nm, 160km, LC, DOM)

Features:

- INF-8074 and SFF-8472 Compliance
- Duplex LC Connector
- Commercial Temperature 0 to 70 Celsius
- Single-mode Fiber
- Hot Pluggable
- Excellent ESD Protection
- Metal with Lower EMI
- RoHS Compliant and Lead Free



Applications:

- 1x Fibre Channel
- 1000Base-SX Ethernet
- Access, Metro and Enterprise

Product Description

This Alcatel-Lucent Nokia® 3AL82081AA compatible SFP transceiver provides 1000Base-CWDM throughput up to 160km over single-mode fiber (SMF) using a wavelength of 1510nm via an LC connector. It can operate at temperatures between 0 and 70C. The listed reach has been determined using a link budget calculation and tested in a standard environment. Actual link distances achieved will be dependent upon the deployed environment. Our transceiver is built to meet or exceed OEM specifications and is guaranteed to be 100% compatible with Alcatel-Lucent Nokia®. It has been programmed, uniquely serialized, and tested for data-traffic and application to ensure that it will initialize and perform identically. All of our transceivers comply with Multi-Source Agreement (MSA) standards to provide seamless network integration. This transceiver is Trade Agreements Act (TAA) compliant. We stand behind the quality of our products and proudly offer a limited lifetime warranty.

AddOn's transceivers are RoHS compliant and lead-free.

TAA refers to the Trade Agreements Act (19 U.S.C. & 2501-2581), which is intended to foster fair and open international trade. TAA requires that the U.S. Government may acquire only "U.S.-made or designated country end products."

TAA COMPLIANT

Absolute Maximum Ratings

Parameter	Symbol	Min.	Typ.	Max.	Unit	Notes
Data Rate	DR	0.622		1.25	Gbps	
Bit Error Rate	BER			10^{-12}		
Operating Case Temperature	Tc	0		70	C	1, 4
Storage Temperature	Tstg	-40		85	C	2
Supply Current	Icc		200	300	mA	3
Maximum Voltage	VMAX	−0.5		4	V	3

Notes:

1. Case temperature.
2. Ambient temperature.
3. For the electrical power interface.
4. Commercial temperature.

Electrical Characteristics

Parameter	Symbol	Min.	Typ.	Max.	Unit	Notes
Input Voltage	Vcc	3.14	3.3	3.46	V	
Supply Current	Icc		200	300	mA	3
Transmitter						
Input Differential Impedance	RIN		100		Ω	
Single-Ended Data Input Swing	VIN,pp	250		1200	mV	
Transmit Disable Voltage	VD	Vcc−1.3		Vcc	V	
Transmit Enable Voltage	VEN	Vee		Vee+0.8	V	
Transmit Disable Assert Time				10	us	
Receiver						
Single-Ended Data Output Swing	VOUT,pp	300	400	800	mV	
Data Output Rise/Fall Time	Tr/Tf		100	175	ps	
LOS Asserted	VLOSA	Vcc−0.5		Host_Vcc	V	
LOS De-Asserted	VLOSD	Vee		Vee+0.5	V	

Optical Characteristics

Parameter	Symbol	Min.	Typ.	Max.	Unit	Notes
Transmitter						
Output Optical Power	PTX	3		7	dBm	1
Optical Center Wavelength	λC	1505	1511	1517	nm	
Extinction Ratio	ER	9			dB	
Side-Mode Suppression Ratio	SMSR	30			dB	
Spectral Width (-20dB)	Δλ			1	nm	
Optical Rise/Fall Time (20-80%)	Tr/Tf			180	ps	
Relative Intensity Noise	RIN			-120	dB/Hz	
Transmitter Jitter (Pk-Pk)	TJ			100	ps	
Output Eye	Compliant with IEEE 802.3					
Receiver						
Optical Input Wavelength	λC	1270		1620	nm	
Receiver Sensitivity	Rx_SEN			−34	dBm	2
Receiver Overload	POL	-7			dBm	
LOS Assert	LOSA	−42			dBm	
LOS De-Assert	LOSD			−34	dBm	
LOS Hysteresis	LOSH	0.5			dB	

Notes:

1. Average launch power.
2. Measured with a 2^7-1 test pattern over 120km @1.25Gbps with BER<10^{-12}.

Pin Descriptions

Pin	Symbol	Name/Description	Notes
1	VeeT	Transmitter Ground (Common with Receiver Ground).	1
2	Tx_Fault	Transmitter Fault.	
3	Tx_Disable	Transmitter Disable. Laser output disabled on “high” or “open.”	2
4	SDA	2-Wire Serial Interface Data.	3
5	SCL	2-Wire Serial Interface Clock.	3
6	MOD_ABS	Module Absent. Grounded within the module.	3
7	RS0	No Connection Required.	
8	LOS	Loss of Signal Indication. “Logic 0” indicates normal operation.	4
9	RS1	No Connection Required.	1
10	VeeR	Receiver Ground (Common with Transmitter Ground).	1
11	VeeR	Receiver Ground (Common with Transmitter Ground).	1
12	RD–	Receiver Inverted Data Out. AC Coupled.	
13	RD+	Receiver Non-Inverted Data Out. AC Coupled.	
14	VeeR	Receiver Ground (Common with Transmitter Ground).	1
15	VccR	Receiver Power Supply.	
16	VccT	Transmitter Power Supply.	
17	VeeT	Transmitter Ground (Common with Receiver Ground).	1
18	TD+	Transmitter Non-Inverted Data In. AC Coupled.	
19	TD–	Transmitter Inverted Data In. AC Coupled.	
20	VeeT	Transmitter Ground (Common with Receiver Ground).	1

Notes:

1. The circuit ground is isolated from the chassis ground.
2. Disabled: TDIS>2V or open, enabled: TDIS<0.8V.
3. Should be pulled up with 4.7kΩ to 10kΩ on the host board to a voltage between 2V and 3.6V.
4. LOS is open collector output.

Electrical Pad Layout

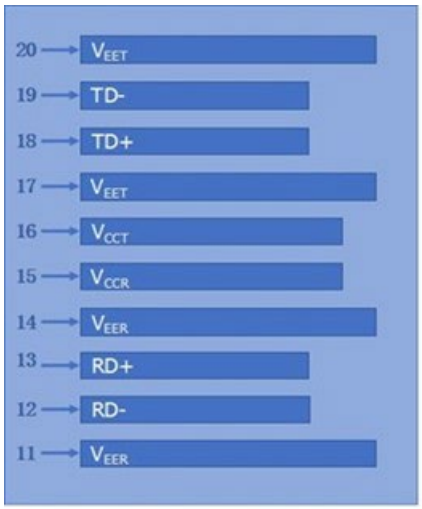

Top of Board

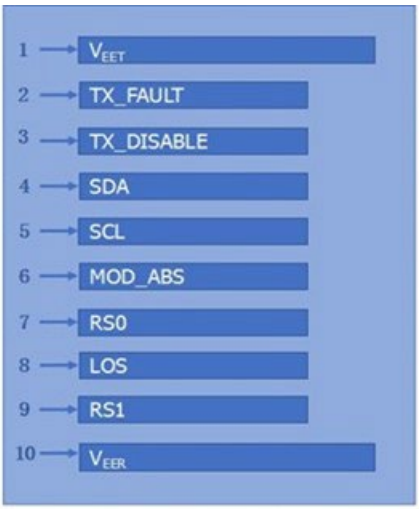

Bottom of Board

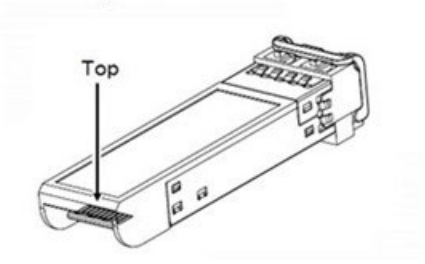

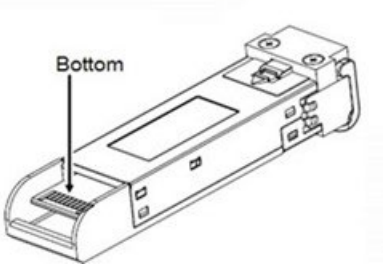

Block Diagram of Transceiver

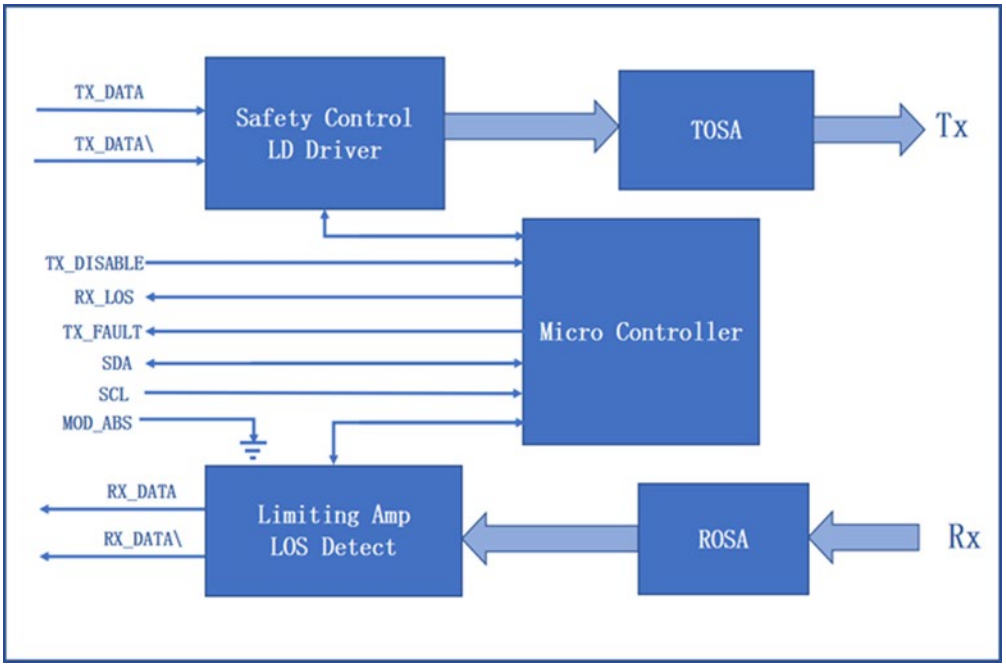

Mechanical Specifications

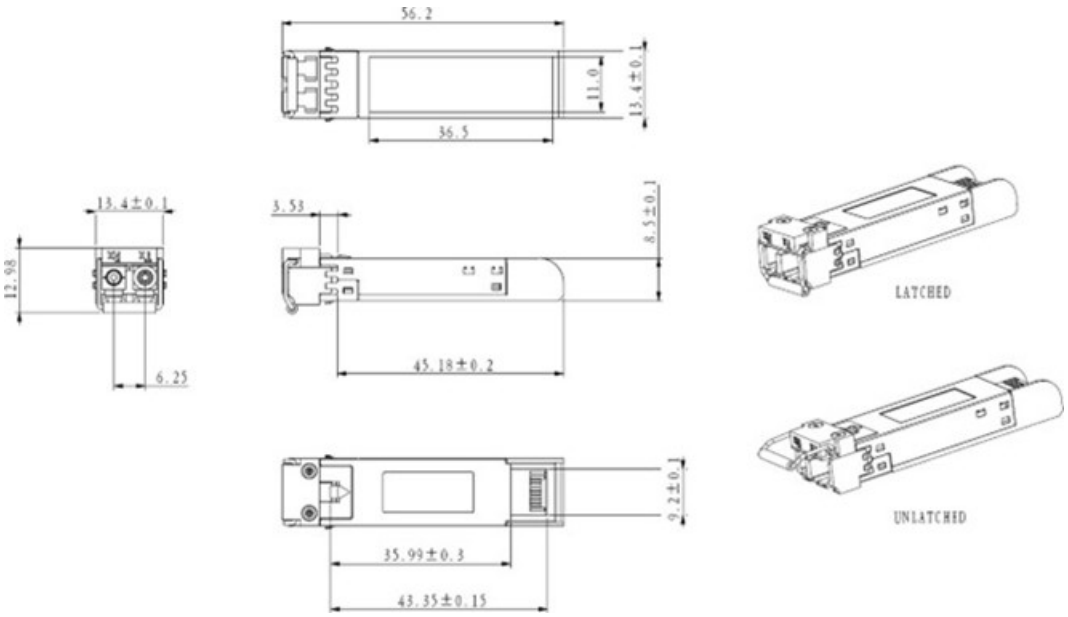

All dimensions are ±0.2mm unless otherwise specified.
Unit: mm

About AddOn Networks

In 1999, AddOn Networks entered the market with a single product. Our founders fulfilled a severe shortage for compatible, cost-effective optical transceivers that compete at the same performance levels as leading OEM manufacturers. Adhering to the idea of redefining service and product quality not previously had in the fiber optic networking industry, AddOn invested resources in solution design, production, fulfillment, and global support.

Combining one of the most extensive and stringent testing processes in the industry, an exceptional free tech support center, and a consistent roll-out of innovative technologies, AddOn has continually set industry standards of quality and reliability throughout its history.

Reliability is the cornerstone of any optical fiber network and is ingrained in AddOn's DNA. It has played a key role in nurturing the long-term relationships developed over the years with customers. AddOn remains committed to exceeding industry standards with certifications ranging from NEBS Level 3 to ISO 9001:2015 with every new development while maintaining the signature reliability of its products.



U.S. Headquarters

Email: sales@addonnetworks.com

Telephone: +1 877.292.1701

Fax: 949.266.9273

Europe Headquarters

Email: salesemea@addonnetworks.com

Telephone: +44 1285 842070