3FE65106AA-53-AO

Alcatel-Lucent Nokia® 3FE65106AA-53 Compatible TAA 1000Base-BX 2-Channel SFP Transceiver (SMF, 1550nmTx/1310nmRx, 10km, LC, DOM)

Features:

- INF-8074 and SFF-8472 Compliance
- Simplex LC Connector
- Commercial Temperature 0 to 70 Celsius
- Single-mode Fiber
- Hot Pluggable
- Excellent ESD Protection
- Metal with Lower EMI
- RoHS Compliant and Lead Free



Applications:

- 1000Base-BX Ethernet
- Access and Enterprise

Product Description

This Alcatel-Lucent Nokia® 3FE65106AA-53 compatible SFP transceiver provides 1000Base-BX 2-Channel throughput up to 10km over single-mode fiber (SMF) using a wavelength of 1550nmTx/1310nmRx via an LC connector. This bidirectional unit must be used with another transceiver or network appliance of complementing wavelengths. It can operate at temperatures between 0 and 70C. Our transceiver is built to meet or exceed OEM specifications and is guaranteed to be 100% compatible with Alcatel-Lucent Nokia®. It has been programmed, uniquely serialized, and tested for data-traffic and application to ensure that it will initialize and perform identically. All of our transceivers comply with Multi-Source Agreement (MSA) standards to provide seamless network integration. Additional product features include Digital Optical Monitoring (DOM) support which allows access to real-time operating parameters. We stand behind the quality of our products and proudly offer a limited lifetime warranty.

AddOn's transceivers are RoHS compliant and lead-free.

TAA refers to the Trade Agreements Act (19 U.S.C. & 2501-2581), which is intended to foster fair and open international trade. TAA requires that the U.S. Government may acquire only "U.S.-made or designated country end products."

TAA COMPLIANT

Regulatory Compliance

- ESD to the Electrical PINs: compatible with MIL-STD-883E Method 3015.4
- ESD to the LC Receptacle: compatible with IEC 61000-4-3
- EMI/EMC compatible with FCC Part 15 Subpart B Rules, EN55022:2010
- Laser Eye Safety compatible with FDA 21CFR, EN60950-1& EN (IEC) 60825-1,2
- RoHS compliant with EU RoHS 2.0 directive 2015/863/EU

Absolute Maximum Ratings

Parameter	Symbol	Min.	Typ.	Max.	Unit
Maximum Supply Voltage	Vcc	-0.5		4.0	V
Storage Temperature	TS	-40		85	°C
Operating Case Temperature	Tc	-10		70	°C
Relative Humidity	RH	5		95	%
Data Rate			1.25/1.25		Gb/s

Electrical Characteristics

Parameter	Symbol	Min.	Typ.	Max.	Unit	Notes
Supply Voltage	Vcc	3.15	3.30	3.43	V	
Transmitter						
Module Supply Current	Icc			450	mA	
Power dissipation	P_D			1.5	W	
Low speed output: Transmitter Fault(TX_FAULT) / Loss of Signal (LOS)	VOH	2.0		Vcc+0.3	V	1
	VOL	0		0.8	V	
Low speed output: Transmitter Disable (TX_DISABLE), MOD_DEF 1, MOD_DEF 2	VIH	2.0		Vcc+0.3	V	2
	VIL	0		0.8	V	

Notes:

1. Pulled up externally with a 4.7KΩ-10KΩ resistor on the host board to VCCT,R.
2. Mod_Def1 and Mod_Def2 must be pulled up externally with a 4.7KΩ-10KΩ resistor on the host board to VCCT,R.

Optical Characteristics

Parameter	Symbol	Min.	Typ.	Max.	Unit	Notes
Transmitter						
Launch Optical Power	Po	-9		-3	dBm	
Center Wavelength Range	Λc	1530	1550	1570	nm	
Extinction Ratio	EX	9			db	
Spectral Width (-20dB) @1490nm	Δλ			1	nm	
Pout @TX-Disable Asserted	Poff			-45	dBm	
Eye Diagram	Compliant with IEEE802.3 ah (class 1 laser safety)					
Receiver						
Wavelength Range		1260	1310	1360	nm	
Receiver Sensitivity	S			-20	dBm	1
Receiver Overload	P_{OL}	-3			dBm	1
Optical Return Loss	ORL	12			dB	
LOS De-Assert	LOS_D			-22	dBm	1
LOS Assert	LOS_A	-35			dBm	
LOS Hysteresis		0.5	3	5	dB	

Notes:

1. Measured with PRBS 27-1 test pattern, 1.25Gb/s, EX=9dB, BER<10-12

Pin Descriptions

Pin	Symbol	Function/Descriptions	Notes
1	Vee	Transceiver Ground	VEE may be internally connected within the SFP module
2	TX Fault	Transmitter Fault Indication	TX Fault is an open collector/ drain output, which should be pulled up with a 4.7K–10K resistor on the host board. Note 1 for more information
3	TX1_ Disable	Transmitter Disable of Ch A	Module channel A disables function
4	MOD-DEF2	Two-wires interface Data	2 wire serial ID interface, SDA
5	MOD-DEF1	Two-wires interface Clock	2 wire serial ID interface, SCL
6	TD2-	Inverted Transmit Data Input of Ch B	These are the differential transmitter puts. They are AC-coupled, differential lines with 100 differential termination inside the module. The AC coupling is done inside the module and is thus not required on the host board
7	TD2+	Transmit Data Input of Ch B	
8	LOS1	Loss of Signal of Ch A	Loss of Signal detected function. Note 2 for more information.
9	RD2+	Received Data Output of Ch B	These are the differential receiver outputs. They are AC coupled 100 differential lines which should be terminated with 100(differential) at the user SERDES. The AC coupling is done inside the module and is thus not required on the host board.
10	RD2-	Inverted Received Data Output of Ch B	
11	VEE	Transceiver Ground	VEE may be internally connected within the SFP module.
12	RD1-	Inverted Received Data Output of Ch A	These are the differential receiver outputs. They are AC coupled 100 differential lines which should be terminated with 100(differential) at the user SERDES. The AC coupling is done inside the module and is thus not required on the host board.
13	RD1+	Received Data Output of Ch A	
14	LOS2	Loss of Signal of CH B	Loss of Signal detected function. Note 2 for more information.
15	VCCR	Receiver Power	3.3V± 5%. Note 3 for more information
16	VCCT	Transmitter Power	3.3V± 5%. Note 3 for more information
17	TX2_Disable	Transmitter Disable of Ch B	Module channel B disables function
18	TD1+	Transmit Data Input of Ch A	These are the differential transmitter puts. They are AC-coupled, differential lines with 100 differential termination inside the module. The AC coupling is done inside the module and is thus not required on the host board
19	TD1-	Inverted Transmit Data Input of Ch A	
20	VEE	Transceiver Ground	VEE may be internally connected within the SFP module.

Notes:

1. When high, output indicates a laser fault of some kind either in Channel A or Channel B. The Host shall read Channel A/B for details: TX Fault from channel A if bit 2 is set in [A2H:110]; TX Fault from channel B if bit 2 is set in [B2H: 110]. Low indicates normal operation. In the low state, the output will be pulled to < 0.8V.

2. When high, this output indicates the received optical power is below the worst-case receiver sensitivity (as defined by the standard in use). Low indicates normal operation. In the low state, the output will be pulled to < 0.4V.
3. VccT VccR are the power supplies. They are defined as 3.3V ±5% at the SFP connector pin. Maximum supply current is 400Ma@3.3V. Vcc may be internally connected within the SFP transceiver module.

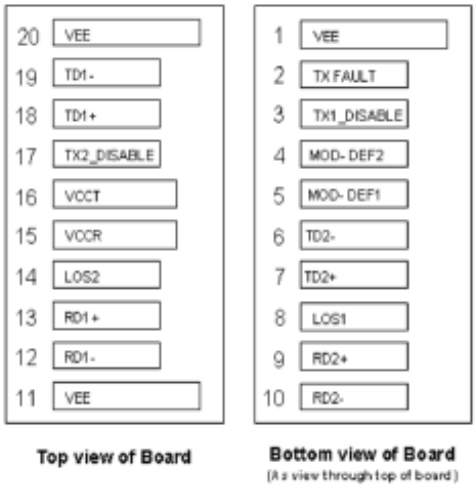

Pin-out of connector Block on Host board

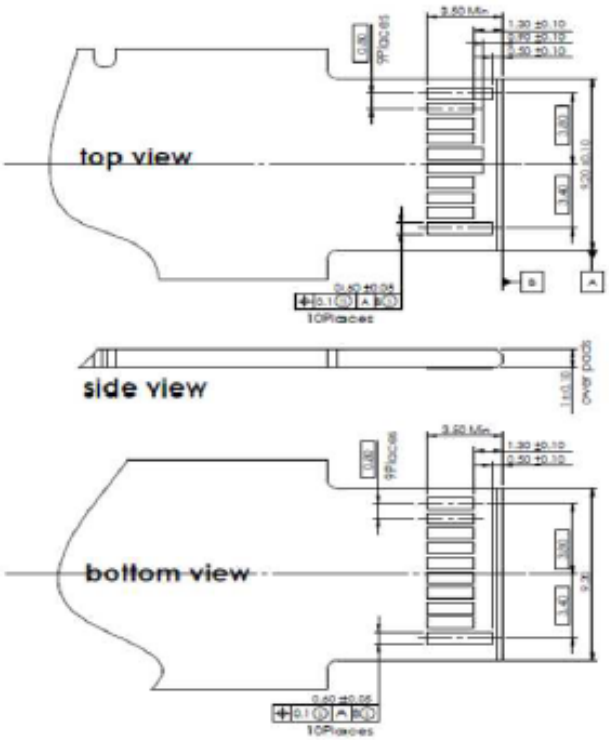

EEPROM Memory Map

Channel 1:

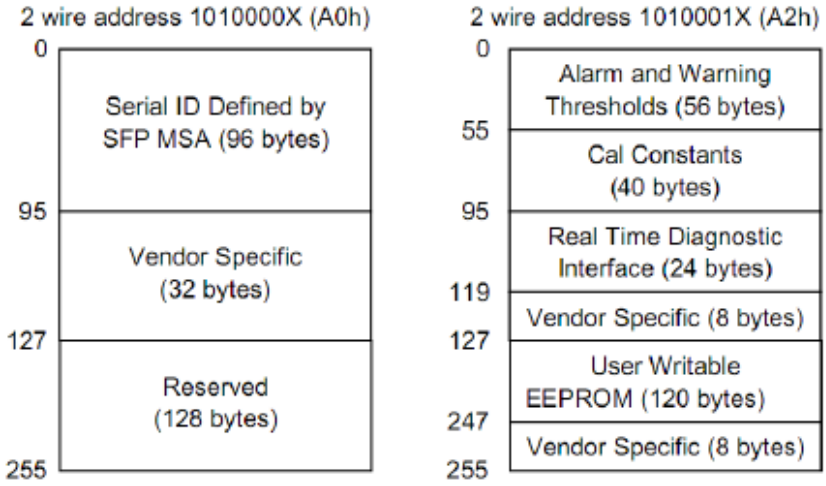

Channel 2:

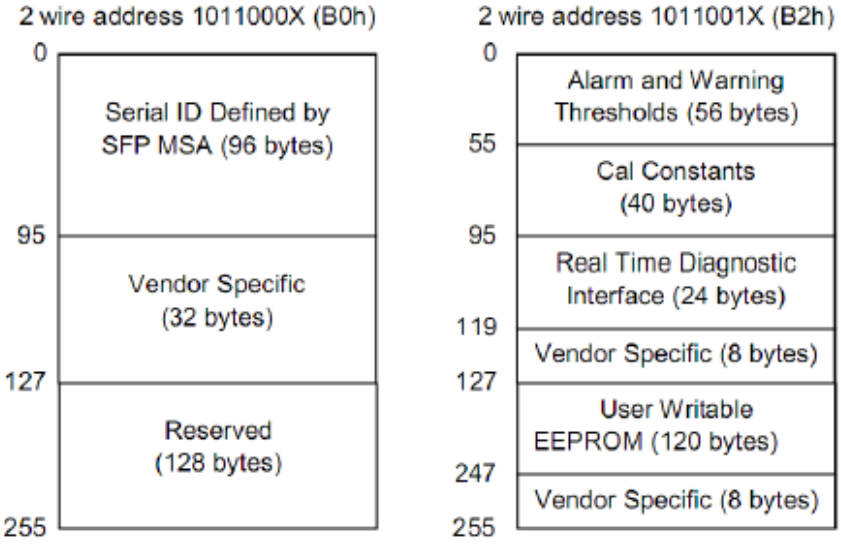

Recommended Application Interface Circuit

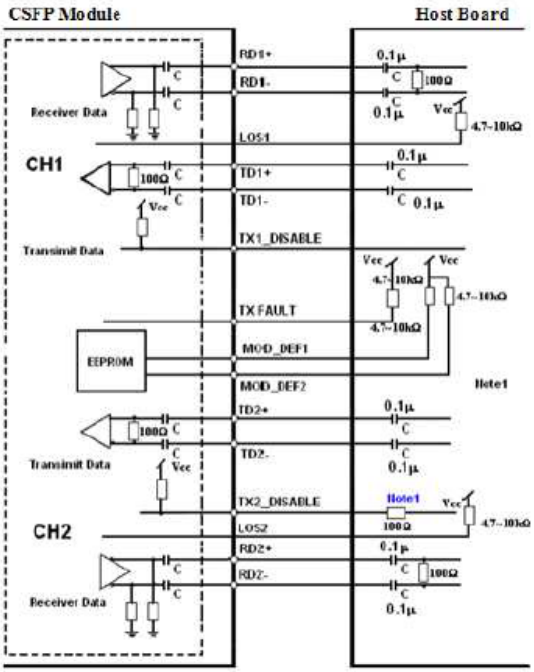

Mechanical Specifications

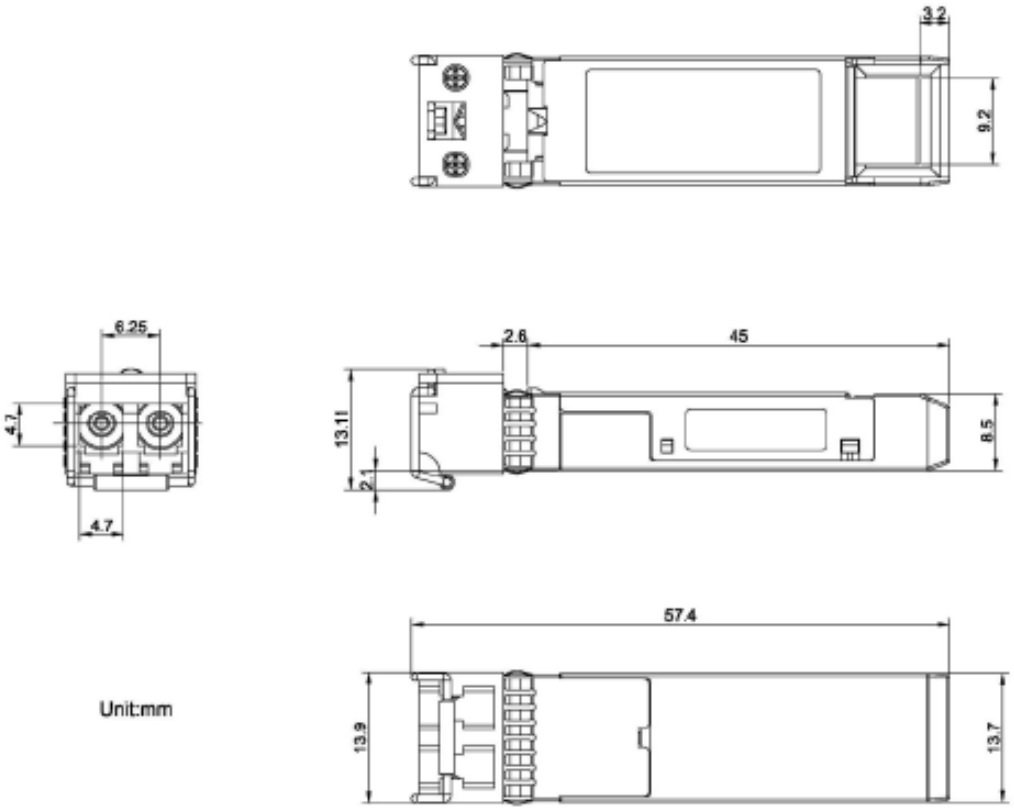

About AddOn Networks

In 1999, AddOn Networks entered the market with a single product. Our founders fulfilled a severe shortage for compatible, cost-effective optical transceivers that compete at the same performance levels as leading OEM manufacturers. Adhering to the idea of redefining service and product quality not previously had in the fiber optic networking industry, AddOn invested resources in solution design, production, fulfillment, and global support.

Combining one of the most extensive and stringent testing processes in the industry, an exceptional free tech support center, and a consistent roll-out of innovative technologies, AddOn has continually set industry standards of quality and reliability throughout its history.

Reliability is the cornerstone of any optical fiber network and is ingrained in AddOn's DNA. It has played a key role in nurturing the long-term relationships developed over the years with customers. AddOn remains committed to exceeding industry standards with certifications ranging from NEBS Level 3 to ISO 9001:2015 with every new development while maintaining the signature reliability of its products.



U.S. Headquarters

Email: sales@addonnetworks.com

Telephone: +1 877.292.1701

Fax: 949.266.9273

Europe Headquarters

Email: salesemea@addonnetworks.com

Telephone: +44 1285 842070