3HE00029CA-DW-C36-43-AO

Alcatel-Lucent Nokia® 3HE00029CA-DW-C36-43 Compatible TAA Compliant 1000Base-DWDM SFP Transceiver (SMF, Ch36-Ch43 Tunable, 120km, LC, DOM)

Features:

- INF-8074 and SFF-8472 Compliance
- Commercial Temperature 0 to 70 Celsius
- Duplex LC Connector
- Hot Pluggable
- Excellent ESD Protection
- Single-mode Fiber
- RoHS Compliant and Lead Free
- Metal with Lower EMI



Applications:

- 1x Fibre Channel
- Gigabit Ethernet over DWDM
- Access, Metro and Enterprise

Product Description

This Alcatel-Lucent Nokia® 3HE00029CA-DW-C36-43 compatible SFP transceiver provides 1000Base-DWDM throughput up to 80km over single-mode fiber (SMF) using a narrowband, tunable wavelength via an LC connector. It is guaranteed to be 100% compatible with the equivalent Alcatel-Lucent Nokia® transceiver. This easy to install, hot swappable transceiver has been programmed, uniquely serialized and data-traffic and application tested to ensure that it will initialize and perform identically. Digital optical monitoring (DOM) support is also present to allow access to real-time operating parameters. This transceiver is Trade Agreements Act (TAA) compliant. We stand behind the quality of our products and proudly offer a limited lifetime warranty.

AddOn's transceivers are RoHS compliant and lead-free.

TAA refers to the Trade Agreements Act (19 U.S.C. & 2501-2581), which is intended to foster fair and open international trade. TAA requires that the U.S. Government may acquire only "U.S.-made or designated country end products."

TAA COMPLIANT

Regulatory Compliance

- ESD to the Electrical PINs: compatible with MIL-STD-883E Method 3015.4
- ESD to the LC Receptacle: compatible with IEC 61000-4-3
- EMI/EMC compatible with FCC Part 15 Subpart B Rules, EN55022:2010
- Laser Eye Safety compatible with FDA 21CFR, EN60950-1& EN (IEC) 60825-1,2
- RoHS compliant with EU RoHS 2.0 directive 2015/863/EU

Absolute Maximum Ratings

Parameter	Symbol	Min.	Typ.	Max.	Unit	Notes
Maximum Supply Voltage	Vcc	0		3.6	V	
Storage Temperature	TS	-40		+85	°C	
Operating Case Temperature	Tc	0		+70	°C	
Relative Humidity	RH	5		85	%	1
Electrical static discharge (HBM Model)	ESD	500		1000	V	2
Receiver Optical Damage Threshold	RXDmg			+3.5	dBm	3

Notes:

1. Non-condensing
2. ESD, per JEDEC JESD22-A114-B
3. This must not be exceeded

Electrical Characteristics

Parameter	Symbol	Min.	Typ.	Max.	Unit	Notes
Power Supply Voltage	Vcc	3.14	3.3	3.46	V	
Power supply current	Icc			550	mA	
Total power dissipation	PD			1.8	W	

Optical Characteristics

Parameter	Symbol	Min.	Typ.	Max.	Unit
Transmitter					
Signaling Rate				1.25	Gbps
Optical Output Power	Po	-1		+5	dBm
Transmission Distance		0		120	km
Transmitter Dispersion Penalty	TDP			2	dB
Extinction Ratio	ER	8.2			dB
Optical Eye Shape & Mask		IEEE 802.3ab			
Eye Mask Margin		10			%
Spectral Width				1	nm
Optical Frequency Tuning Range (5 bands)		192.00 (1561.42)		195.90 (1530.33)	THz (nm)
SMSR		30	35		dB
Optical Frequency Minimum Tuning Grid		100			GHz
Optical Centre Wavelength	λc	As per ITU-T 694.1			nm
Optical Frequency Accuracy (deviation from centre)		-12.5		+12.5	GHz
Time to Initialize Cooled Operation			10	90	Sec
Tuning Speed (Channel to Channel)				10	Sec
Receiver					
Receiver Wavelength Range		191.00 (1569.59)		197.00 (1521.79)	THz (nm)
Receiver Overload		-12			dBm
Receiver Sensitivity (BER lE-12, PRBS 231-1)				-30	dBm
Receiver Optical Reflectance				-27	dB
LOS assert		-35		-30	dBm
LOS assert/de-assert hysteresis		0.5		2.0	dB

Block Diagram

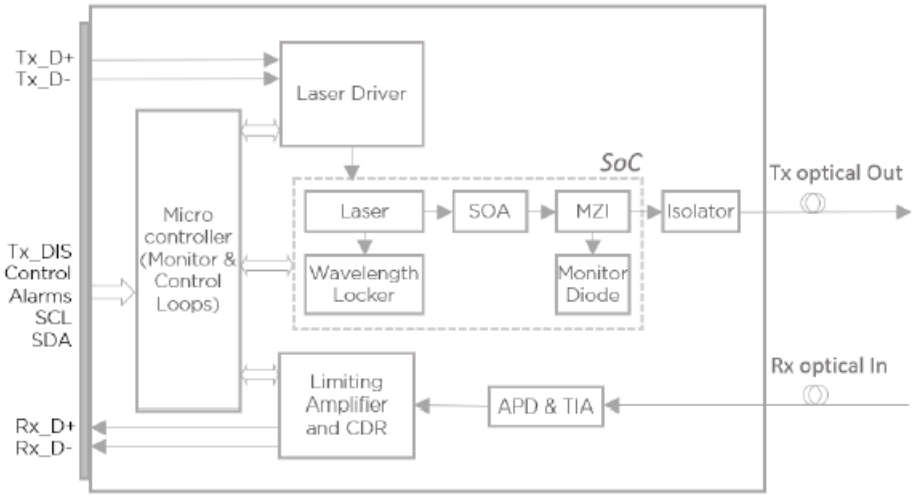

Pin Descriptions

Pin	Logic	Symbol	Name/Descriptions	Notes
1		VeeT	Module Transmitter Ground	1
2	LVTTL-O	TX Fault	Module Transmitter Fault	2
3	LVTTL-I	TX Disable	Transmitter Disable. Turns off laser output	3
4	LVTTL-I/O	SDA	2-wire Serial interface Data line	
5	LVTTL-I/O	SCL	2-wire Serial Interface Clock	
6		Mod ABS	Module absent, connect to VeeT or VeeR in the module	
7	LVTTL-I	RS0	Unused	
8	LVTTL-O	Rx LOS	Receiver Loss of Signal Indication	2
9	LVTTL-I	RSl	Unused	
10		VeeR	Module Receiver Ground	1
11		VeeR	Module Receiver Ground	1
12	CML-O	RD-	Receiver Inverted Data Output	
13	CML-O	RD+	Receiver Non-Inverted Data Output	1
14		VeeR	Module Receiver Ground	
15		VccR	Module Receiver 3.3V Supply	
16		VccT	Module Transmitter 3.3V Supply	
17		VeeT	Module Transmitter Ground	1
18	CML-I	TD+	Transmitter Non-Inverted Data Input	
19	CML-I	TD-	Transmitter Inverted Data Input	
20		VeeT	Module Transmitter Ground	1

Notes:

1. The module signal ground pins, VeeR and VeeT, are isolated from the module chasis ground.

2. This pin is an open collector/drain output pin and shall be pulled up with 4.7-10 kohms to power supply voltage between 3.3V and 3.5V on the host board.
3. TX_Disable is an input contact with a 4.7-10 kohm pull-up to VccT inside the module.

Electrical Pin-out Details

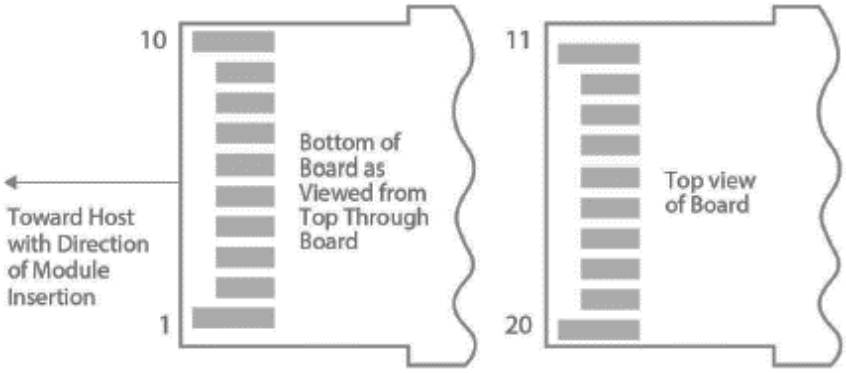

Mechanical Specifications

Small Form Factor Pluggable (SFP) transceivers are compatible with the dimensions defined by the SFP Multi-Sourcing Agreement (MSA).

W 13.9mm x L 56.5mm x H 11.85mm

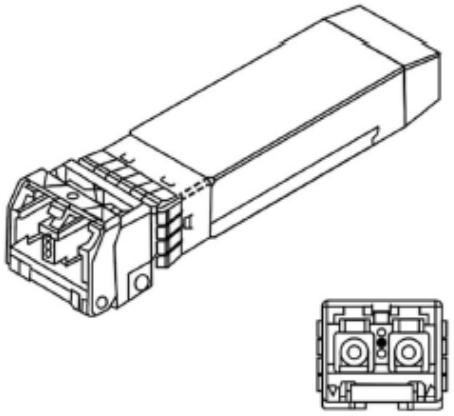

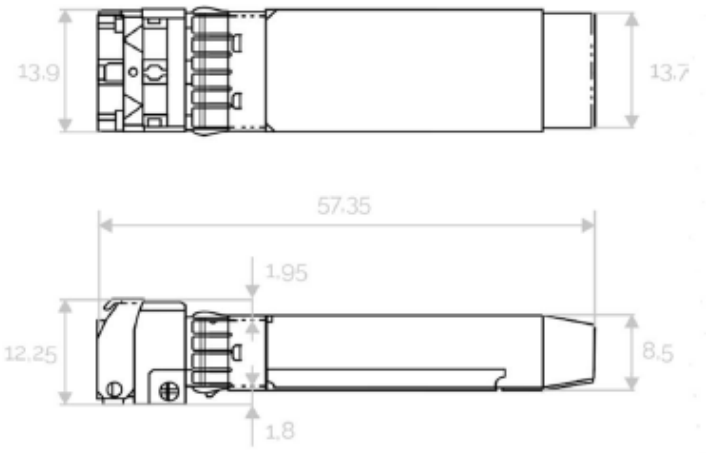

About AddOn Networks

In 1999, AddOn Networks entered the market with a single product. Our founders fulfilled a severe shortage for compatible, cost-effective optical transceivers that compete at the same performance levels as leading OEM manufacturers. Adhering to the idea of redefining service and product quality not previously had in the fiber optic networking industry, AddOn invested resources in solution design, production, fulfillment, and global support.

Combining one of the most extensive and stringent testing processes in the industry, an exceptional free tech support center, and a consistent roll-out of innovative technologies, AddOn has continually set industry standards of quality and reliability throughout its history.

Reliability is the cornerstone of any optical fiber network and is ingrained in AddOn's DNA. It has played a key role in nurturing the long-term relationships developed over the years with customers. AddOn remains committed to exceeding industry standards with certifications ranging from NEBS Level 3 to ISO 9001:2015 with every new development while maintaining the signature reliability of its products.



U.S. Headquarters

Email: sales@addonnetworks.com

Telephone: +1 877.292.1701

Fax: 949.266.9273

Europe Headquarters

Email: salesemea@addonnetworks.com

Telephone: +44 1285 842070