1AB407440002-20-AO

Alcatel-Lucent Nokia® 1AB407440002-20 Compatible TAA Compliant 1000Base-LX SFP Transceiver (SMF, 1310nm, 20km, LC, DOM, -40 to 85C)

Features:

- INF-8074 and SFF-8472 Compliance
- Duplex LC Connector
- Industrial Temperature -40 to 85 Celsius
- Single-mode Fiber
- Hot Pluggable
- Excellent ESD Protection
- Metal with Lower EMI
- RoHS Compliant and Lead Free



Applications:

- 1x Fibre Channel
- 1000Base-LX Ethernet
- Access and Enterprise

Product Description

This Alcatel-Lucent Nokia® 1AB407440002-20 compatible SFP transceiver provides 1000Base-LX throughput up to 20km over single-mode fiber (SMF) at a wavelength of 1310nm using an LC connector. It can operate at temperatures between -40 and 85C. It is guaranteed to be 100% compatible with the equivalent Alcatel-Lucent Nokia® transceiver. This easy to install, hot swappable transceiver has been programmed, uniquely serialized and data-traffic and application tested to ensure that it will initialize and perform identically. Digital optical monitoring (DOM) support is also present to allow access to real-time operating parameters. This transceiver is Trade Agreements Act (TAA) compliant. We stand behind the quality of our products and proudly offer a limited lifetime warranty.

AddOn's transceivers are RoHS compliant and lead-free.

TAA refers to the Trade Agreements Act (19 U.S.C. & 2501-2581), which is intended to foster fair and open international trade. TAA requires that the U.S. Government may acquire only "U.S.-made or designated country end products."

TAA COMPLIANT

Absolute Maximum Ratings

Parameter	Symbol	Min.	Max.	Unit
Maximum Supply Voltage	Vcc	-0.5	4.0	V
Storage Temperature	Tstg	-40	85	°C
Operating Case Temperature	Tc	-40	85	°C
Operating Humidity	RH	5	85	%
Receiver Power	R_{MAX}		0	dBm
Maximum Bitrate	B_{max}		1.25	Gbps

Electrical Characteristics (Tc=25°C, Vcc=3.3 Volts)

Parameter	Symbol	Min.	Typ.	Max.	Unit	Notes
Power Supply Voltage	Vcc	3.15	3.30	3.43	V	
Power Supply Current	Icc			303	mA	
Power Consumption				1	W	
Transmitter						
Differential Data Input Swing	VIN,pp	120		850	mV	
Input Differential Impedance	ZIN	80	100	120	Ω	
Receiver						
Differential Data Output Swing	VOUT,pp	300		850	mV	
Output Differential Impedance	ZIN	80	100	120	Ω	

Optical Characteristics

Parameter	Symbol	Min.	Typ.	Max.	Unit	Notes
Transmitter						
Optical Power (Average)	P_{AVE}	-9.5		-3	dBm	1
Optical Extinction Ratio	ER	9			dB	
Optical Wavelength	Tλ	1270	1310	1355	nm	
Insertion Loss	IL		0.6			
Receiver						
Receiver Sensitivity (Average)	R_{AVE}			-24	dBm	3
Receiver Overload	P_{max}	0			dBm	4
Optical Return Loss	ORL	12			dB	
Receiver Wavelength	Rλ	1260		1565	nm	

Notes:

1. Coupled into a single-mode fiber.
2. Per IEEE 802.3ah specification.
3. Average power, back-to-back, @1.25Gbps, BER $1E^{-12}$, and PRBS 2^{31}-1.
4. Exceeding the Receiver Overload can physically damage the module. Please use appropriate attenuation.

Pin Descriptions

Pin	Symbol	Name/Description	Notes
1	VeeT	Transmitter Ground (Common with Receiver Ground).	1
2	Tx_Fault	Transmitter Fault. Not Supported.	
3	Tx_Disable	Transmitter Disable. Laser output disabled on “high” or “open.”	2
4	MOD_DEF (2)	Module Definition 2. Data Line for Serial ID.	3
5	MOD_DEF (1)	Module Definition 1. Clock Line for Serial ID.	3
6	MOD_DEF (0)	Module Definition 0. Grounded within the module.	3
7	Rate Select	No Connection Required.	
8	LOS	Loss of Signal Indication. “Logic 0” indicates normal operation.	4
9	VeeR	Receiver Ground (Common with Transmitter Ground).	1
10	VeeR	Receiver Ground (Common with Transmitter Ground).	1
11	VeeR	Receiver Ground (Common with Transmitter Ground).	1
12	RD-	Receiver Inverted Data Out. AC Coupled.	
13	RD+	Receiver Non-Inverted Data Out. AC Coupled.	
14	VeeR	Receiver Ground (Common with Transmitter Ground).	1
15	VccR	Receiver Power Supply.	
16	VccT	Transmitter Power Supply.	
17	VeeT	Transmitter Ground (Common with Receiver Ground).	1
18	TD+	Transmitter Non-Inverted Data In. AC Coupled.	
19	TD-	Transmitter Inverted Data In. AC Coupled.	
20	VeeT	Transmitter Ground (Common with Receiver Ground).	1

Notes:

1. The circuit ground is isolated from the chassis ground.
2. Disabled: T_{DIS}>2V or Open, Enabled: T_{DIS}<0.8V.
3. Should be pulled up with 4.7kΩ to 10kΩ on the host board to a voltage between 2V and 3.6V.
4. LOS is an open collector output.

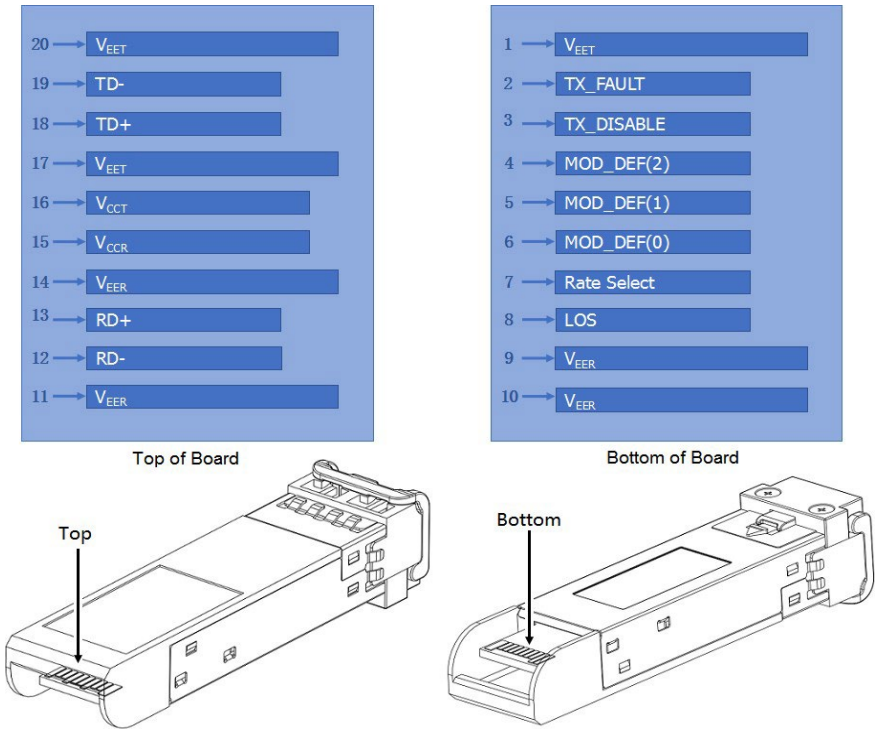

Pin-Out of Connector Block on the Host Board

Recommended Circuit Schematic

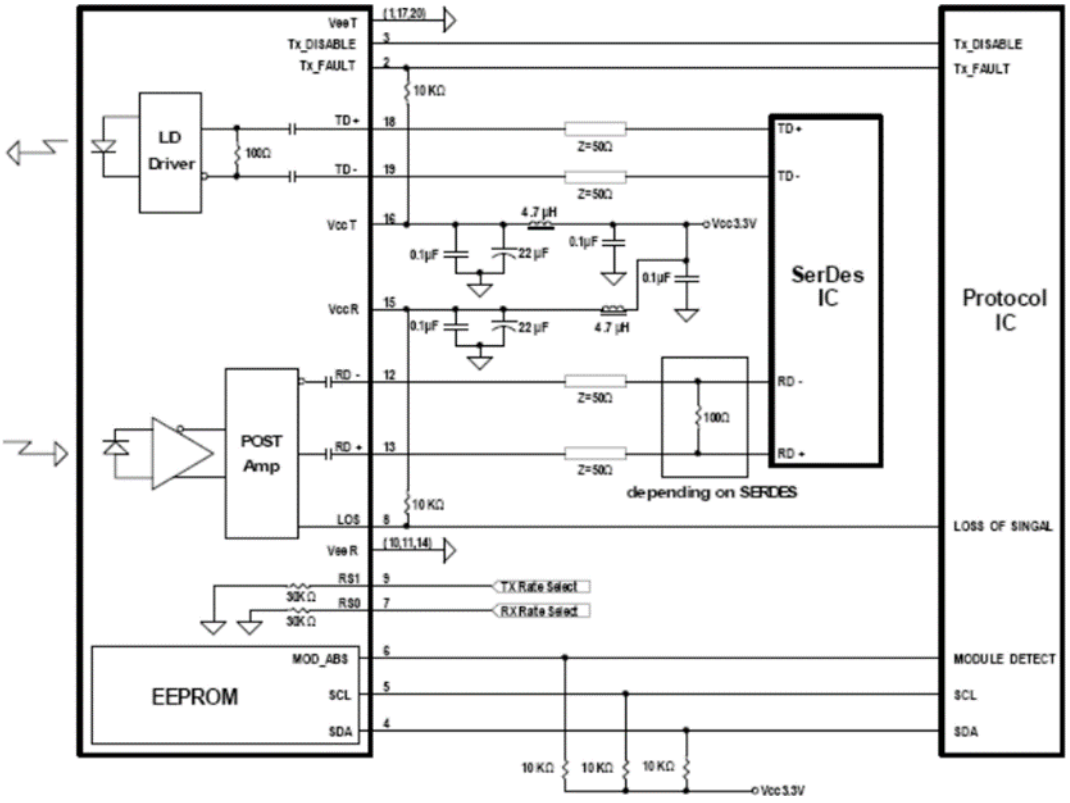

Mechanical Specifications

Small Form Factor Pluggable (SFP) transceivers are compatible with the dimensions defined by the SFP Multi-Sourcing Agreement (MSA).

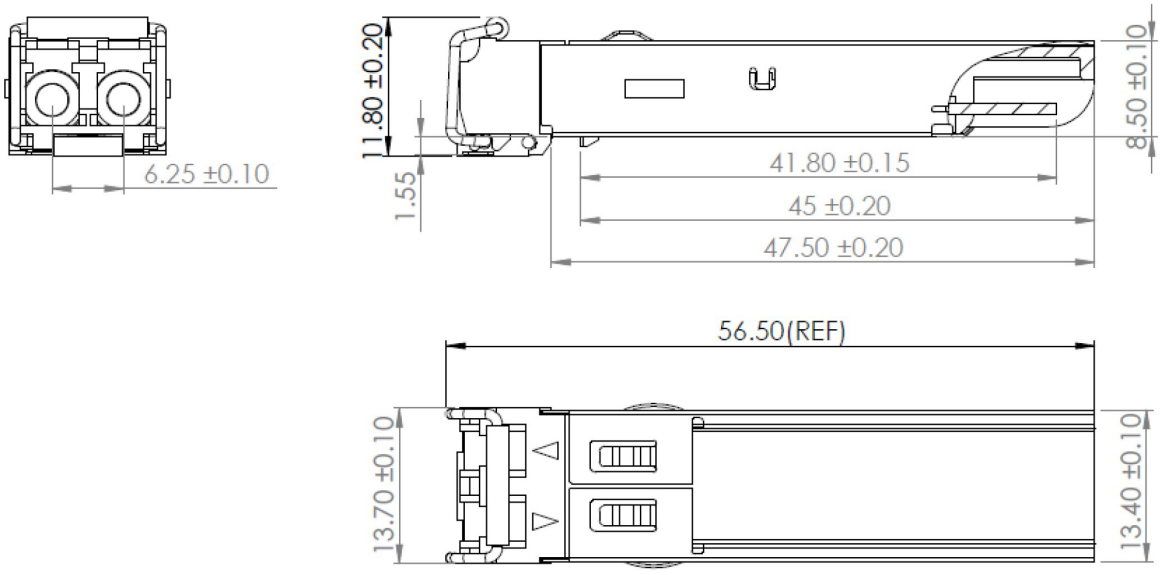

EEPROM Information

EEPROM memory map-specific data field description is as below:

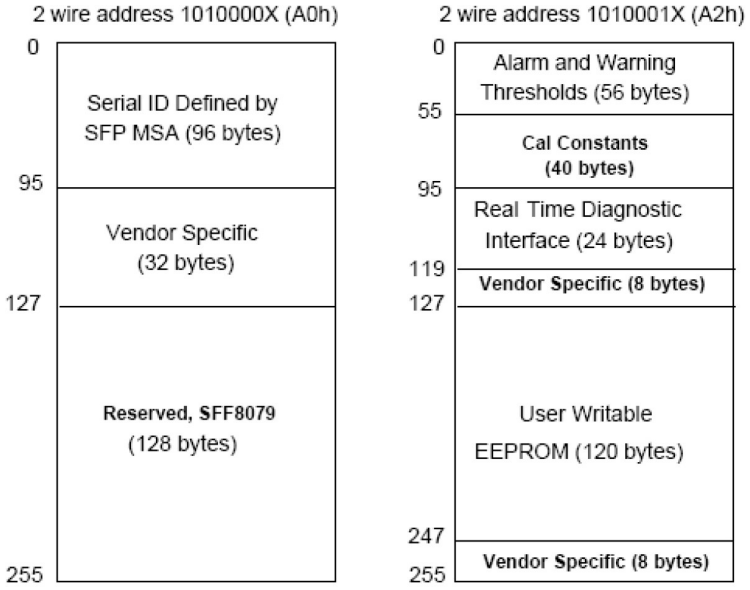

About AddOn Networks

In 1999, AddOn Networks entered the market with a single product. Our founders fulfilled a severe shortage for compatible, cost-effective optical transceivers that compete at the same performance levels as leading OEM manufacturers. Adhering to the idea of redefining service and product quality not previously had in the fiber optic networking industry, AddOn invested resources in solution design, production, fulfillment, and global support.

Combining one of the most extensive and stringent testing processes in the industry, an exceptional free tech support center, and a consistent roll-out of innovative technologies, AddOn has continually set industry standards of quality and reliability throughout its history.

Reliability is the cornerstone of any optical fiber network and is ingrained in AddOn's DNA. It has played a key role in nurturing the long-term relationships developed over the years with customers. AddOn remains committed to exceeding industry standards with certifications ranging from NEBS Level 3 to ISO 9001:2015 with every new development while maintaining the signature reliability of its products.



U.S. Headquarters

Email: sales@addonnetworks.com

Telephone: +1 877.292.1701

Fax: 949.266.9273

Europe Headquarters

Email: salesemea@addonnetworks.com

Telephone: +44 1285 842070