1AB377220029-AO

Alcatel-Lucent Nokia® 1AB377220029 Compatible TAA 2.5GBase-DWDM SFP Transceiver C-Band 100GHz (SMF, 1550.12nm, 80km, LC, DOM, -40 to 85C)

Features:

- SFF-8432 and SFF-8472 Compliance
- Duplex LC Connector
- Industrial Temperature -40 to 85 Celsius
- Single-mode Fiber
- Hot Pluggable
- Excellent ESD Protection
- Metal with Lower EMI
- RoHS Compliant and Lead Free



Applications:

- 2x Fibre Channel
- Gigabit Ethernet over DWDM
- Access, Metro and Enterprise

Product Description

This Alcatel-Lucent Nokia® 1AB377220029 compatible SFP transceiver provides 2.5GBase-DWDM throughput up to 80km over single-mode fiber (SMF) using a wavelength of 1550.12nm via an LC connector. It is capable of withstanding -40 to 85C environments and can operate at temperatures between -40 and 85C. Our transceiver is built to meet or exceed OEM specifications and is guaranteed to be 100% compatible with Alcatel-Lucent Nokia®. It has been programmed, uniquely serialized, and tested for data-traffic and application to ensure that it will initialize and perform identically. All of our transceivers comply with Multi-Source Agreement (MSA) standards to provide seamless network integration. Additional product features include Digital Optical Monitoring (DOM) support which allows access to real-time operating parameters. This transceiver is Trade Agreements Act (TAA) compliant. We stand behind the quality of our products and proudly offer a limited lifetime warranty.

AddOn's transceivers are RoHS compliant and lead-free.

TAA refers to the Trade Agreements Act (19 U.S.C. & 2501-2581), which is intended to foster fair and open international trade. TAA requires that the U.S. Government may acquire only "U.S.-made or designated country end products."

TAA COMPLIANT

Regulatory Compliance

- ESD to the Electrical PINs: compatible with MIL-STD-883E Method 3015.4
- ESD to the LC Receptacle: compatible with IEC 61000-4-3
- EMI/EMC compatible with FCC Part 15 Subpart B Rules, EN55022:2010
- Laser Eye Safety compatible with FDA 21CFR, EN60950-1& EN (IEC) 60825-1,2
- RoHS compliant with EU RoHS 2.0 directive 2015/863/EU

Wavelength Guide (100GHz ITU-T Channel)

ITU Channel	Frequency (THZ)	Center Wavelength (nm)
61	196.1	1528.77
60	196.0	1529.55
59	195.9	1530.33
58	195.8	1531.12
57	195.7	1531.90
56	195.6	1532.68
55	195.5	1533.47
54	195.4	1534.25
53	195.3	1535.04
52	195.2	1535.82
51	195.1	1536.61
50	195.0	1537.40
49	194.9	1538.19
48	194.8	1538.98
47	194.7	1539.77
46	194.6	1540.56
45	194.5	1541.35
44	194.4	1542.14
43	194.3	1542.94
42	194.2	1543.73
41	194.1	1544.53
40	194.0	1545.32
39	193.9	1546.12
38	193.8	1546.92
37	193.7	1547.72
36	193.6	1548.51
35	193.5	1549.32
34	193.4	1550.12
33	193.3	1550.92
32	193.2	1551.72
31	193.1	1552.52
30	193.0	1553.33
29	192.9	1554.13
28	192.8	1554.94
27	192.7	1555.75
26	192.6	1556.55
25	192.5	1557.36

24	192.4	1558.17
23	192.3	1558.98
22	192.2	1559.79
21	192.1	1560.61
20	192.0	1561.42
19	191.9	1562.23
18	191.8	1563.05

Absolute Maximum Ratings

Parameter	Symbol	Min.	Max.	Unit
Storage Temperature	TS	-5	70	°C
Relative Humidity	RH	5	95	%
Supply Voltage	Vcc	-0.5	4.0	V

Recommended Operating Conditions

Parameter	Symbol	Min.	Typ.	Max.	Unit
Power Supply Voltage	Vcc	3.13	3.30	3.45	V
Power Supply Current	Icc			550	mA
Case Operating Temperature	T_A	-40		85	°C
Data Rate		0.622		2.67	Gb/s

Electrical Characteristics (TOP=25°C, Vcc=3.3V)

Parameter	Symbol	Min.	Typ.	Max.	Unit	Notes
Transmitter						
Transmit Input Differential Voltage (TD +/-)		200		2400	mVp-p	1
TX Disable-High		2.0		3.45	V	4
TX Disable-Low		0		0.8	V	
TX Fault Output Voltage-High		2.0		Vcc	V	3
TX Fault Output Voltage-Low		0		0.5	V	
Receiver						
Recieve Input Differential Voltage (RD +/-)		600		1200	mVp-p	2
Output Differential Impedance	Zout	85	100	115	ohms	

Notes:

1. AC coupled and terminated to 100Ω differential load.
2. Internally AC coupled, but requires a 100Ω differential termination or internal to Serializer/Deserializer
3. Pulled up externally with a 4.7KΩ-10KΩ resistor on the host board to $V_{CCT,R}$. Io = 400μA; Host

Vcc.

4. Mod_Def1 and Mod_Def2 must be pulled up externally with a 4.7KΩ-10KΩ resistor on the host board to VCCT,R..

Optical Characteristics

Parameter	Symbol	Min.	Typ.	Max.	Unit	Notes
Transmitter						
Channel Spacing	Δf		100		GHz	
Wavelength Stability	$\Delta_{\lambda c}$	x--0.1	x	x+0.1	nm	
Average Output Power	Pout	0		4	dB	
Dispersion Penalty				3	dB	
Side Mode Suppression Ratio	SMSR	30			dB	
Extinction Ratio	EX	8.2			dB	
Spectral Width (-20dB)				0.3	nm	
Optical Rise/Fall Time (20%~~80%)	tr/tf			160	ps	
Output Optical Eye	IUT-T G.957 Compliant					
Receiver						
Receive Wavelength	C	1528		1564	nm	
Receiver Sensitivity	Se			-28	dBm	1
Receiver Overload	Pmax	-9			dBm	
LOS De-Assert	LOSD			-27	dBm	
LOS Assert	LOSA	-35			dBm	
LOS Hysteresis		0.5		5	dB	

Notes

1. Measured with PRBS 2^{23}-1 test pattern, 2.48832Gb/s, EX=9dB, BER<10^{-12}.

Pin Descriptions

Pin	Symbol	Name/Descriptions	Ref.
1	VeeT	Transmitter Ground (Common with Receiver Ground)	
2	TX Fault	Transmitter Fault Indication	1
3	TX Disable	Transmitter Disable-Module. Laser output disables on high or open.	2
4	MOD DEF (2)	Module Definition 2. Two wire serial ID interface.	3
5	MOD_DEF (1)	Module Definition 1. Two wire serial ID interface.	3
6	MOD_DEF (0)	Module Definition 0. Two wire serial ID interface.	3
7	Rate Select	No connection required.	
8	LOS	Loss of Signal indication. Logic 0 indicates normal operation.	4
9	VeeR	Receiver Ground (Common with Transmitter Ground)	
10	VeeR	Receiver Ground (Common with Transmitter Ground)	
11	VeeR	Receiver Ground (Common with Transmitter Ground)	
12	RD-	Receiver Inverted DATA out. AC Coupled.	5
13	RD+	Receiver Non-inverted DATA out. AC Coupled.	5
14	VeeR	Receiver Ground (Common with Transmitter Ground)	
15	VccR	Receiver Power Supply +3.3 V±5%.	6
16	VccT	Transmitter Power Supply +3.3 V±5%.	6
17	VeeT	Transmitter Ground (Common with Receiver Ground)	
18	TD+	Transmitter Non-Inverted DATA in. AC Coupled.	7
19	TD-	Transmitter Inverted DATA in. AC Coupled.	7
20	VeeT	Transmitter Ground (Common with Receiver Ground)	

Notes:

1. TX Fault is open collector/drain output, which should be pulled up externally with a 4.7K – 10KΩ resistor on the host board to supply <VccT+0.3V or VccR+0.3V. When high, this output indicates a laser fault of some kind. Low indicates normal operation. In the low state, the output will be pulled to <0.8V.
2. TX Disable input is used to shut down the laser output per the state table below. It is pulled up within the module with a 4.7 –10K resistor. Low (0 – 0.8V): Transmitter on Between (0.8V and 2V): Undefined High (2.0 – VccT): Transmitter Disabled Open: Transmitter Disabled
3. Mod-Def 0, 1, 2. These are the module definition pins. They should be pulled up with a 4.7 - 10K resistor on the host board to supply less than VccT+0.3V or VccR+0.3V. Mod-Def 0, is grounded by the module to indicate that the module is present. Mod-Def 1 is clock line of two-wire serial interface for optional serial ID. Mod-Def 2 is data line of two-wire serial interface for optional serial ID.
4. LOS (Loss of signal) is an open collector/drain output, which should be pulled up externally with a

4.7 – 10K resistor on the host board to supply <VccT+0.3V or VccR+0.3V. When high, this output indicates the received optical power is below the worst-case receiver sensitivity (as defined by the standard in use). Low indicates normal operation. In the low state, the output will be pulled to<0.8V.

5. RD-/+: These are the differential receiver outputs. They are AC coupled 100Ω differential lines which should be terminated with 100Ω differential at the user SERDES. The AC coupling is done inside the module and thus not required on the host board.
6. VccR and VccT are the receiver and transmitter power supplies. They are defined as 3.3V±5% at the SFP connector pin. The in-rush current will typically be no more than 30mA above steady state supply current after 500ns.
7. TD-/+: These are the differential transmitter inputs. They are AC coupled differential lines with 100Ω differential termination inside the module. The AC coupling is done inside the module and is thus not required on host board.

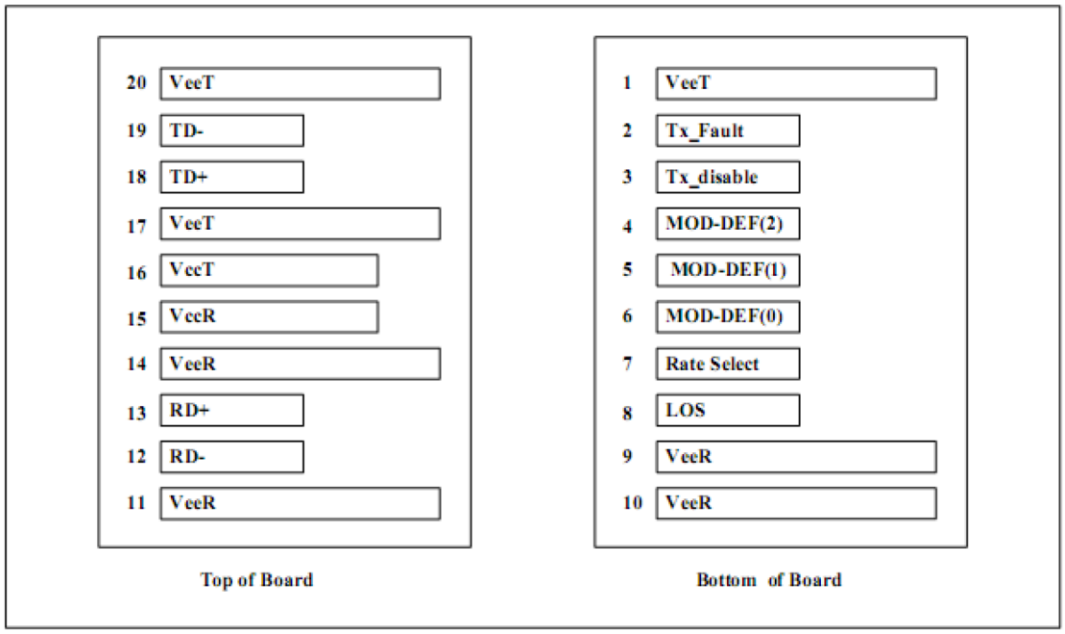

SFP Transceiver Electrical Pad Layout

Block Diagram

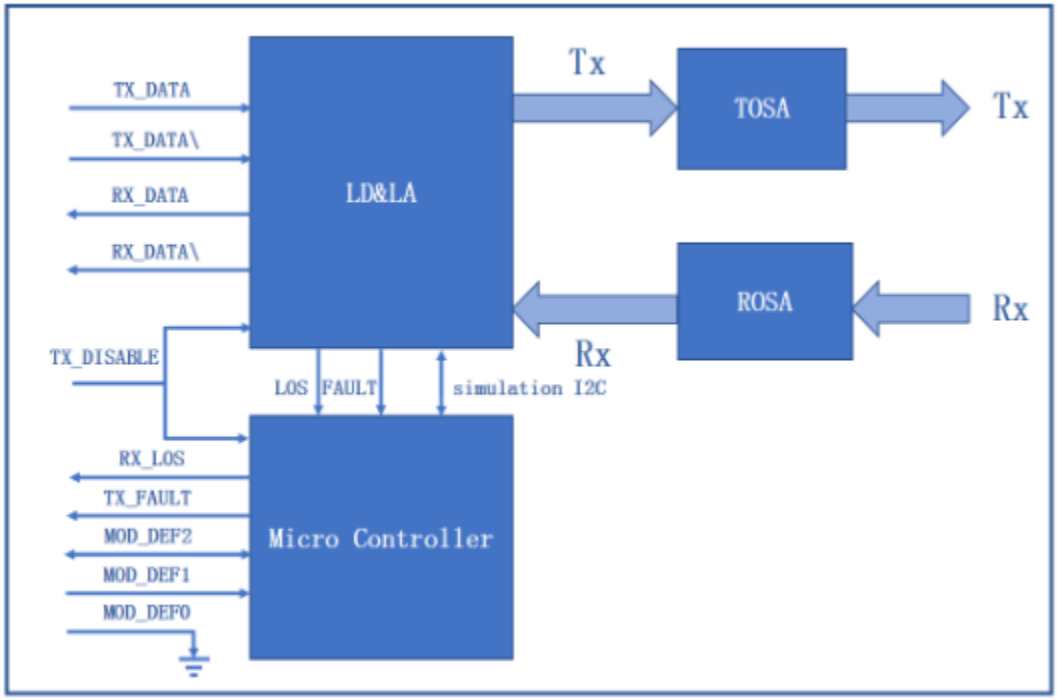

Mechanical Specifications

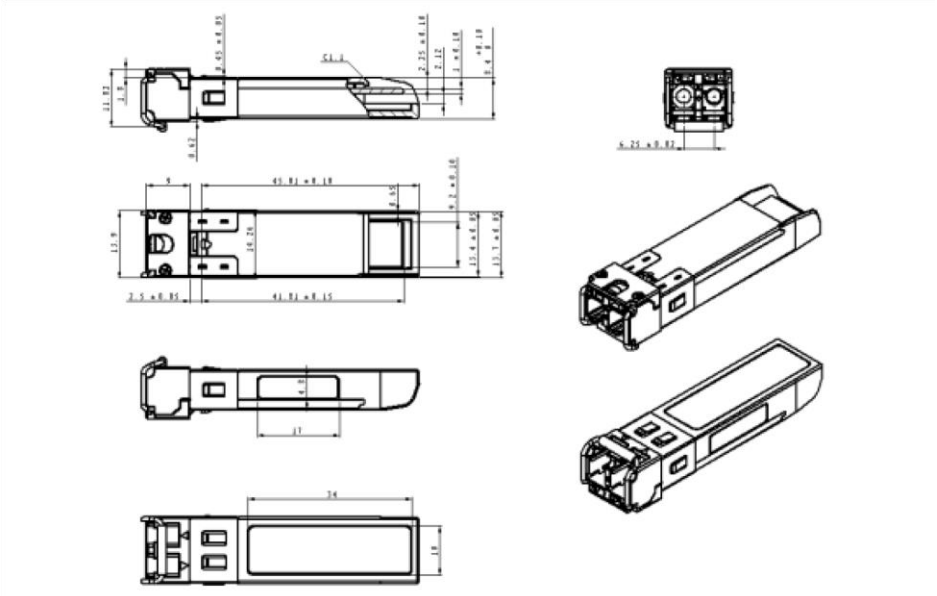

EEPROM Information

EEPROM memory map specific data field description is as below:

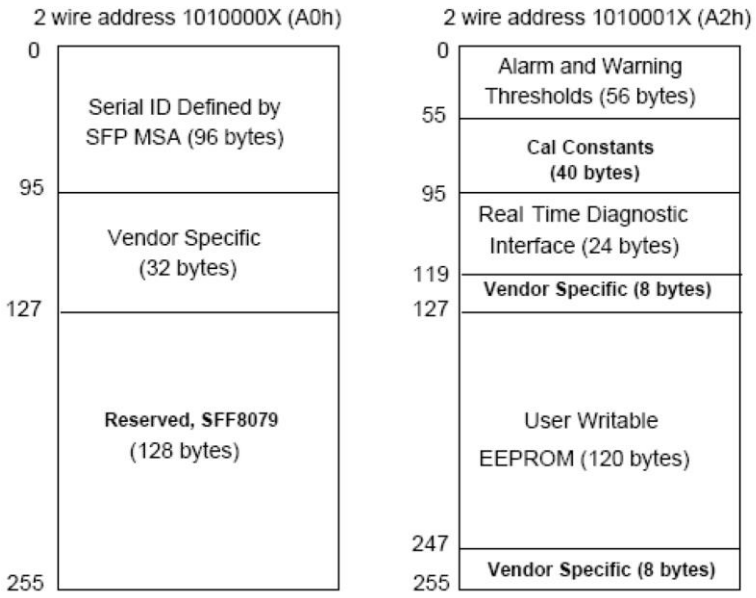

Regulatory Compliance

Feature	Standard	Performance
Electrostatic Discharge (ESD) to the Electrical Pins	MIL-STD-883E Method 3015.7	Class 1 (>500 V) Isolation with the case
Electromagnetic Interference (EMI)	FCC Part 15 Class B	Compatible with standards
Laser Eye Safety	FDA 21CFR 1040.10 and 1040.11 EN60950, EN (IEC) 60825-1,2	Compatible with Class 1 laser product. Compatible with TμV standards
Component Recognition	UL and CUL	UL file E317337
Environmental	RoHS	RoHS6

About AddOn Networks

In 1999, AddOn Networks entered the market with a single product. Our founders fulfilled a severe shortage for compatible, cost-effective optical transceivers that compete at the same performance levels as leading OEM manufacturers. Adhering to the idea of redefining service and product quality not previously had in the fiber optic networking industry, AddOn invested resources in solution design, production, fulfillment, and global support.

Combining one of the most extensive and stringent testing processes in the industry, an exceptional free tech support center, and a consistent roll-out of innovative technologies, AddOn has continually set industry standards of quality and reliability throughout its history.

Reliability is the cornerstone of any optical fiber network and is ingrained in AddOn's DNA. It has played a key role in nurturing the long-term relationships developed over the years with customers. AddOn remains committed to exceeding industry standards with certifications ranging from NEBS Level 3 to ISO 9001:2015 with every new development while maintaining the signature reliability of its products.



U.S. Headquarters

Email: sales@addonnetworks.com

Telephone: +1 877.292.1701

Fax: 949.266.9273

Europe Headquarters

Email: salesemea@addonnetworks.com

Telephone: +44 1285 842070