QSFP28-100GB-ER4-N1-AO

Alcatel-Lucent Nokia® Compatible TAA 100GBase-ER4 QSFP28 Transceiver (SMF, 1295nm to 1309nm, 40km, LC, DOM)

Features:

- SFF-8665 Compliance
- Duplex LC Connector
- Commercial Temperature 0 to 70 Celsius
- Single-mode Fiber
- Hot Pluggable
- Excellent ESD Protection
- Metal with Lower EMI
- RoHS Compliant and Lead Free



Applications:

- 100GBase Ethernet
- Access and Enterprise

Product Description

This Alcatel-Lucent Nokia® compatible QSFP28 transceiver provides 100GBase-ER4 throughput up to 40km over single-mode fiber (SMF) using a wavelength of 1295nm to 1309nm via an LC connector. It is built to MSA standards and is uniquely serialized and data-traffic and application tested to ensure that they will integrate into your network seamlessly. Digital optical monitoring (DOM) support is also present to allow access to real-time operating parameters. This transceiver is Trade Agreements Act (TAA) compliant. We stand behind the quality of our products and proudly offer a limited lifetime warranty.

AddOn's transceivers are RoHS compliant and lead-free.

TAA refers to the Trade Agreements Act (19 U.S.C. & 2501-2581), which is intended to foster fair and open international trade. TAA requires that the U.S. Government may acquire only "U.S.-made or designated country end products."

TAA COMPLIANT

Absolute Maximum Ratings

Parameter	Symbol	Min.	Typ.	Max.	Unit
Storage Temperature	Tstg	-40		85	°C
Operating Case Temperature	Tc	0	25	70	°C
Power Supply Voltage	Vcc	-0.5		4.0	V
Relative Humidity	RH	5		95	%
Data Rate Per Channel			25.78125		Gbps

Electrical Characteristics

Parameter	Symbol	Min.	Typ.	Max.	Unit	Notes
Supply Voltage	Vcc	3.135	3.3	3.465	V	
Module Supply Current	Icc			1500	mA	
Power Dissipation	P_{DISS}			5000	mW	
Transmitter						
Single-Ended Input Voltage Tolerance		-0.3		4.0	V	
Input Differential Impedance	ZIN		100		Ω	
Differential Data Input Swing	VIN,pp	190		700	mVp-p	
AC Common-Mode Input Voltage Tolerance		15			mV	
Differential Input Voltage Swing Threshold			50		mVp-p	
Receiver						
Single-Ended Output Voltage		-0.3		4.0	V	
Output Differential Impedance	ZOUT	90	100	110	Ω	
Differential Data Output Swing	VOUT,pp	300		850	mVp-p	
AC Common-Mode Output Voltage				7.5	mV	

Optical Characteristics

Parameter	Symbol	Min.	Typ.	Max.	Unit	Notes
Transmitter						
Launch Optical Power Per Lane	Po	-2.9		+2.9	dBm	1
Total Launch Optical Power	Po			+8.9	dBm	1
Center Wavelength Range	L1	1294.53	1295.56	1296.59	nm	
	L2	1299.02	1300.05	1301.09	nm	
	L3	1303.54	1304.58	1305.63	nm	
	L4	1308.09	1309.14	1310.19	nm	
Extinction Ratio	ER	8.0			dB	2
Spectral Width (-20dB)	Δλ			1	nm	
Side-Mode Suppression Ratio	SMSR	30			dB	
Optical Return Loss Tolerance	ORLT			20	dB	
POUT @Tx_Disable Asserted	Poff			-30	dBm	1
Eye Mask: (X1, X2, X3, Y1, Y2, Y3)		(0.25, 0.4, 0.45, 0.25, 0.28, 0.4)				
Receiver						
Center Wavelength	L1	1294.53	1295.56	1296.59	nm	
	L2	1299.02	1300.05	1301.09	nm	
	L3	1303.54	1304.58	1305.63	nm	
	L4	1308.09	1309.14	1310.19	nm	
Sensitivity Per Channel (OMA)	S			-21.4	dBm	3
Overload (Per Channel)	POL	+2.0			dBm	3
Damage Threshold (Per Channel)	Pdamage	+5.5			dBm	
Receiver Reflectance	Rf			-26	dB	
LOS De-Assert	LOSD			-28.0	dBm	
LOS Assert	LOSA	-35.0			dBm	
LOS Hysteresis		0.5		5.0	dB	

Notes:

1. The optical power is launched into SMF.
2. Measured with a PRBS 2^{31}-1 test pattern @25.78125Gbps.
3. Measured with PRBS 2^{31}-1 test pattern, @25.78125Gbps, and BER $1.0E^{-12}$.

Pin Descriptions

Pin	Logic	Symbol	Name/Description	Notes
1		GND	Module Ground.	1
2	CML-I	Tx2-	Transmitter Inverted Data Input.	
3	CML-I	Tx2+	Transmitter Non-Inverted Data Input.	
4		GND	Module Ground.	1
5	CML-I	Tx4-	Transmitter Inverted Data Input.	
6	CML-I	Tx4+	Transmitter Non-Inverted Data Input.	
7		GND	Module Ground.	1
8	LVTTL-I	MODSEIL	Module Select.	2
9	LVTTL-I	ResetL	Module Reset.	2
10		VccRx	+3.3V Receiver Power Supply.	
11	LVCMOS-I	SCL	2-Wire Serial Interface Clock.	2
12	LVCMOS-I/O	SDA	2-Wire Serial Interface Data.	2
13		GND	Module Ground.	1
14	CML-O	Rx3+	Receiver Non-Inverted Data Output.	
15	CML-O	Rx3-	Receiver Inverted Data Output.	
16		GND	Module Ground.	1
17	CML-O	Rx1+	Receiver Non-Inverted Data Output.	
18	CML-O	Rx1-	Receiver Inverted Data Output.	
19		GND	Module Ground.	1
20		GND	Module Ground.	1
21	CML-O	Rx2-	Receiver Inverted Data Output.	
22	CML-O	Rx2+	Receiver Non-Inverted Data Output.	
23		GND	Module Ground.	1
24	CML-O	Rx4-	Receiver Inverted Data Output.	
25	CML-O	Rx4+	Receiver Non-Inverted Data Output.	
26		GND	Module Ground.	1
27	LVTTL-O	ModPrsL	Module Present. Internally pulled down to the GND.	
28	LVTTL-O	IntL	Interrupt output should be pulled up on the host board.	2
29		VccTx	+3.3V Transmitter Power Supply.	
30		Vcc1	+3.3V Power Supply.	
31	LVTTL-I	LPMode	Low-Power Mode.	2
32		GND	Module Ground.	1
33	CML-I	Tx3+	Transmitter Non-Inverted Data Input.	
34	CML-I	Tx3-	Transmitter Inverted Data Input.	
35		GND	Module Ground.	1
36	CML-I	Tx1+	Transmitter Non-Inverted Data Input.	
37	CML-I	Tx1-	Transmitter Inverted Data Input.	
38		GND	Module Ground.	1

Notes:

1. Module circuit ground is isolated from the module chassis ground within the module.
2. Open collector. Should be pulled up with 4.7kΩ to 10kΩ on the host board to a voltage between 3.15V and 3.6V.

Electrical Pin-Out Details

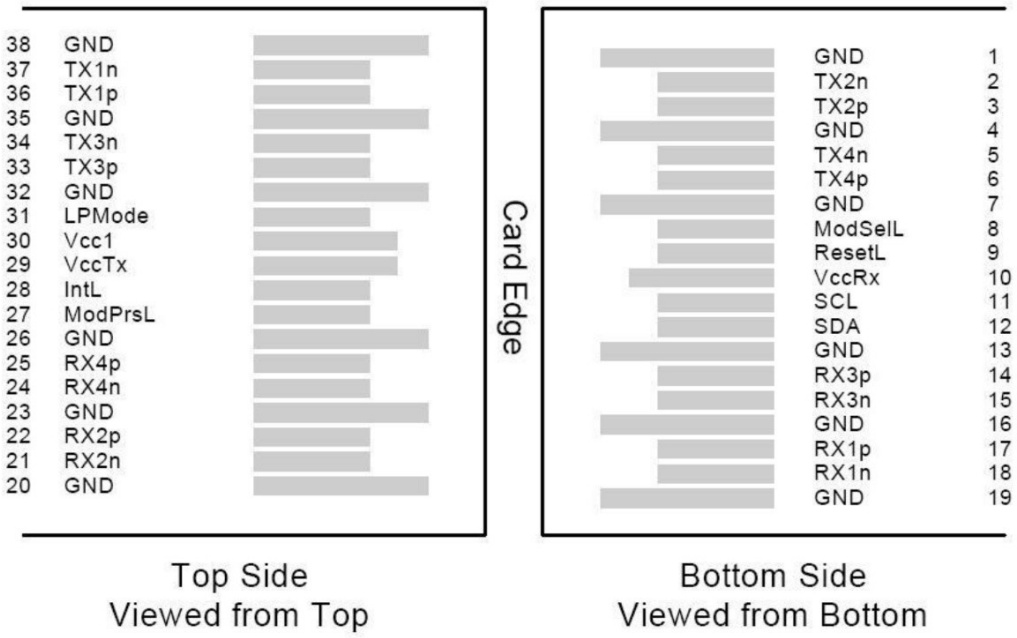

Recommended Host Board Power Supply Filter Network

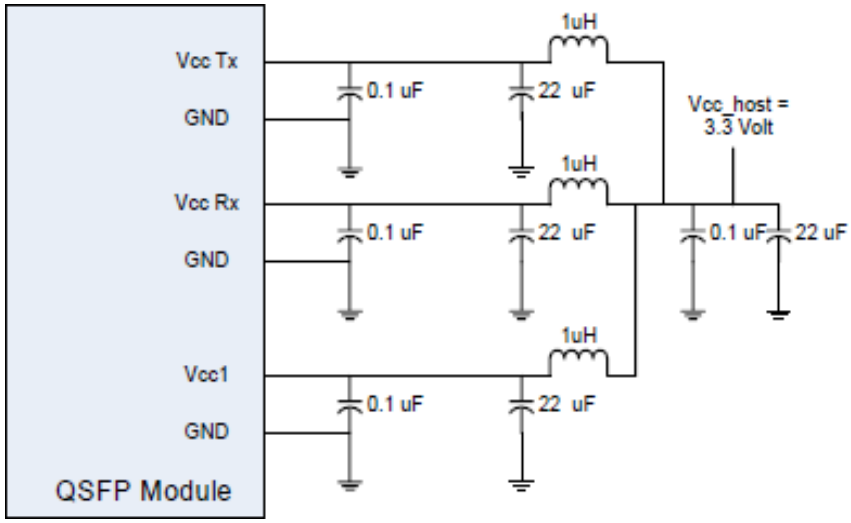

Recommended Application Interface Block Diagram

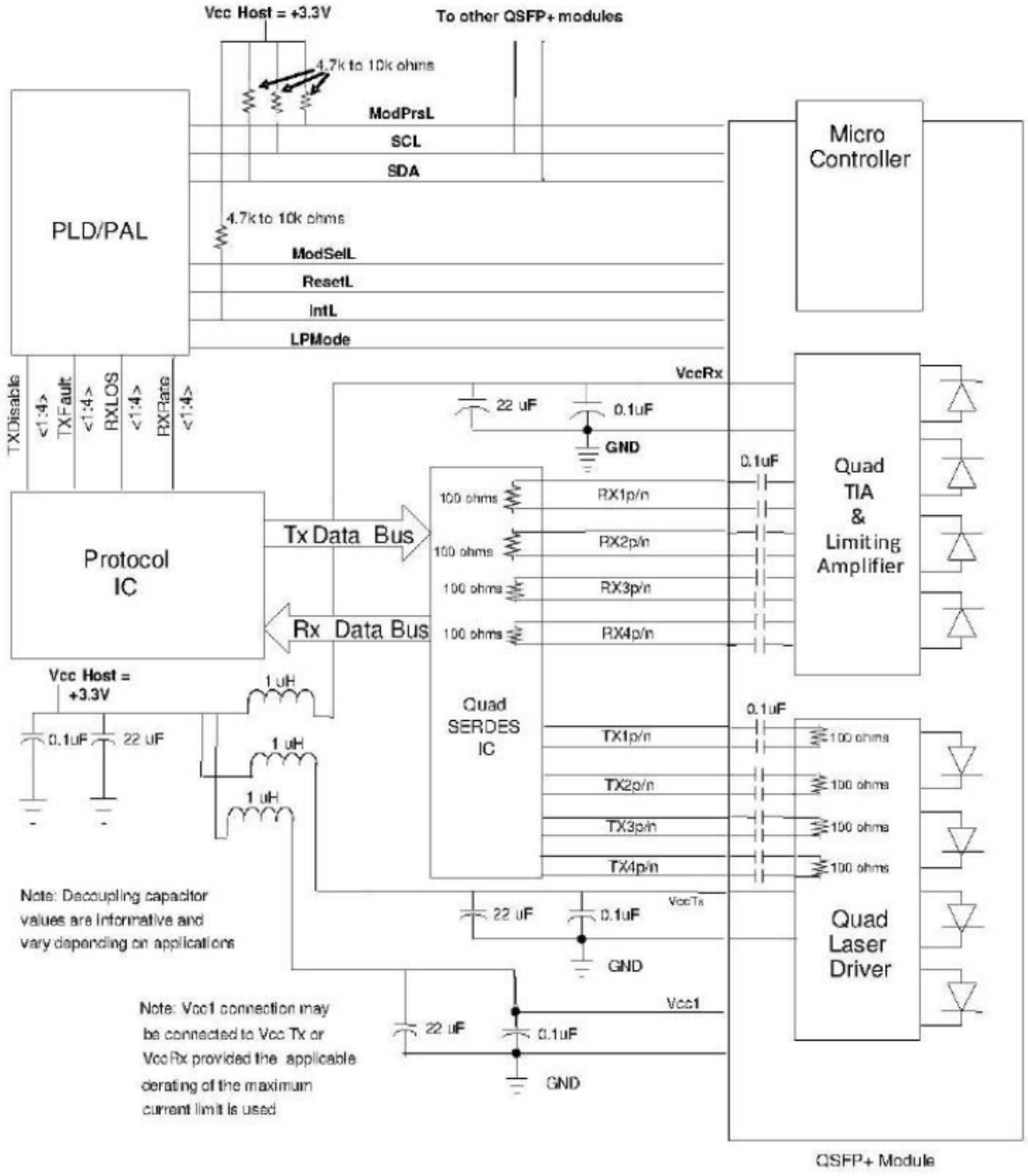

Mechanical Specifications

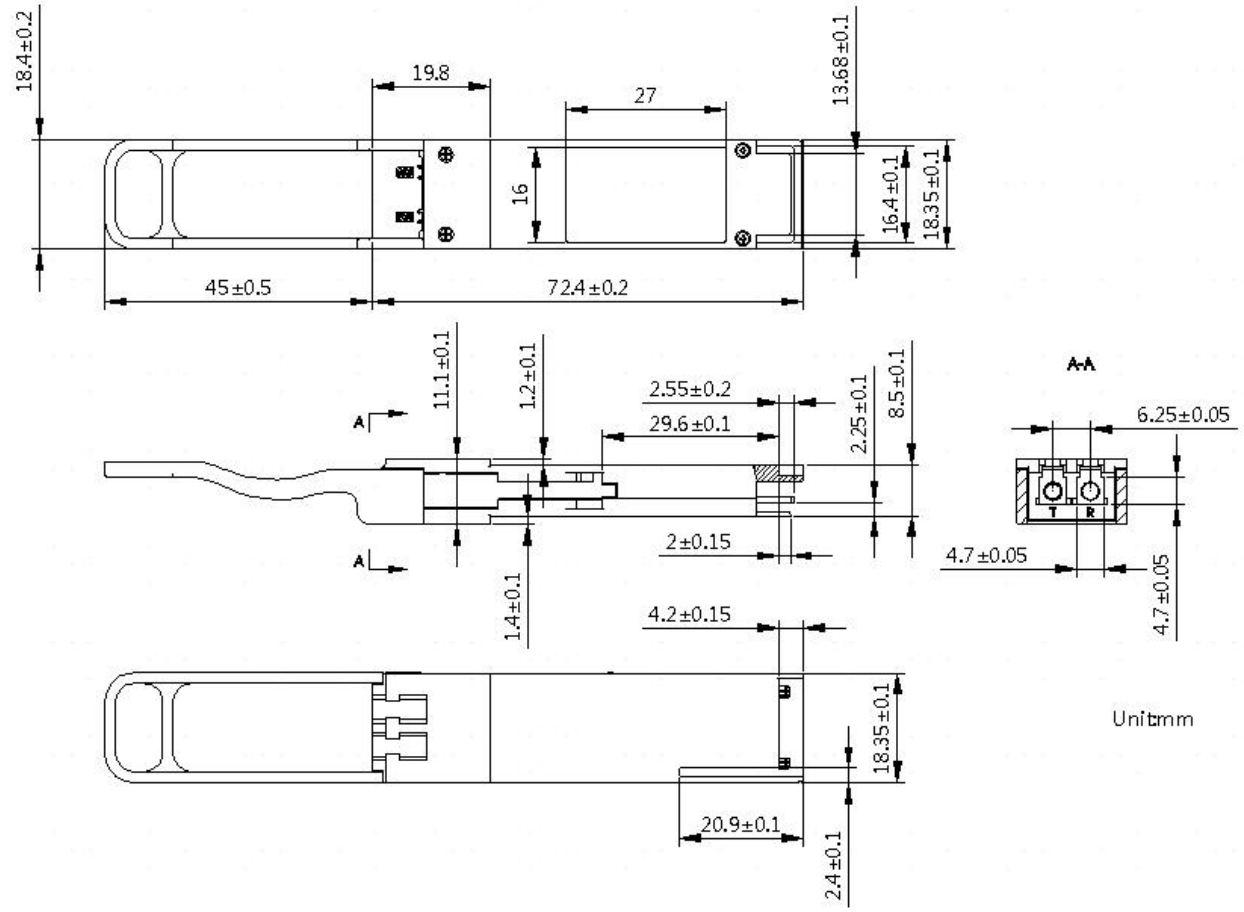

About AddOn Networks

In 1999, AddOn Networks entered the market with a single product. Our founders fulfilled a severe shortage for compatible, cost-effective optical transceivers that compete at the same performance levels as leading OEM manufacturers. Adhering to the idea of redefining service and product quality not previously had in the fiber optic networking industry, AddOn invested resources in solution design, production, fulfillment, and global support.

Combining one of the most extensive and stringent testing processes in the industry, an exceptional free tech support center, and a consistent roll-out of innovative technologies, AddOn has continually set industry standards of quality and reliability throughout its history.

Reliability is the cornerstone of any optical fiber network and is ingrained in AddOn's DNA. It has played a key role in nurturing the long-term relationships developed over the years with customers. AddOn remains committed to exceeding industry standards with certifications ranging from NEBS Level 3 to ISO 9001:2015 with every new development while maintaining the signature reliability of its products.



U.S. Headquarters

Email: sales@addonnetworks.com

Telephone: +1 877.292.1701

Fax: 949.266.9273

Europe Headquarters

Email: salesemea@addonnetworks.com

Telephone: +44 1285 842070