SFP-1G-BXD74-N-AO

Alcatel-Lucent Nokia® Compatible TAA 1000Base-BX SFP Transceiver (SMF, 1570nmTx/1490nmRx, 80km, LC, DOM)

Features:

- SFF-8472 and MSA Compliant
- Single-mode fiber
- Duplex LC Connector
- Commercial Temperature 0 to 70 Celsius
- Support Hot Pluggable
- Single 3.3V power supply
- RoHS compliant and Lead-Free
- Metal with lower EMI



Applications:

- 1000Base Ethernet

Product Description

This Alcatel-Lucent Nokia® compatible SFP transceiver provides 1000Base-BX throughput up to 80km over single-mode fiber (SMF) using a wavelength of 1570nmTx/1490nmRx via an LC connector. This bidirectional unit must be used with another transceiver or network appliance of complementing wavelengths. It is guaranteed to be 100% compatible with the equivalent Alcatel-Lucent Nokia® transceiver. This easy to install, hot swappable transceiver has been programmed, uniquely serialized and data-traffic and application tested to ensure that it will initialize and perform identically. Digital optical monitoring (DOM) support is also present to allow access to real-time operating parameters. This transceiver is Trade Agreements Act (TAA) compliant. We stand behind the quality of our products and proudly offer a limited lifetime warranty.

AddOn's transceivers are RoHS compliant and lead-free.

TAA refers to the Trade Agreements Act (19 U.S.C. & 2501-2581), which is intended to foster fair and open international trade. TAA requires that the U.S. Government may acquire only "U.S.-made or designated country end products."

TAA COMPLIANT

Rev. 092926

Absolute Maximum Ratings

Parameter		Symbol	Min.	Typ.	Max.	Unit	Notes
Maximum Supply Voltage		Vcc	-0.5		3.6	V	
Storage Temperature		Tstg	-40		85	°C	
Operating Case Temperature		Tc	0		70	°C	
Operating Relative Humidity		RH	5		85	%	
9μm Core Diameter SMF		L		80		km	
Data Rate	**GBE**			1.25		Gbps	
	FC			1.063			

Electrical Characteristics

Parameter		Symbol	Min.	Typ.	Max.	Unit	Notes
Supply Voltage		Vcc	3.15	3.3	3.47	V	
Power Supply Current		Icc			300	mA	
Transmitter							
Differential LVPECL Inputs		VIN	400		1800	mVp-p	1
Differential Input Impedance		ZIN	90	100	110	Ω	2
Tx_Disable	**Disable**		2		Vcc+0.3	V	
	Enable		0		0.8	V	
Tx_Fault	**Fault**		2		Vcc+0.3	V	
	Normal		0		0.8	V	
Receiver							
Differential LVPECL Outputs		VOUT	400		2000	mVp-p	3
Differential Output Impedance		ZOUT	90	100	110	Ω	
Tx_Disable Assert Time		T_off			10	us	
Rx_LOS	**LOS**		2		Vcc+0.3	V	
	Normal		0		0.8	V	
MOD_DEF(0.2)		VOH	2.5		Vcc+0.3	V	4
		VOL	0		0.5	V	

Notes:

1. AC coupled inputs. LVPECL logic. Internally AC coupled.
2. Rin>100kΩ @DC.
3. AC coupled outputs. LVPECL logic. Internally AC coupled.
4. With Serial ID.

Optical Characteristics

Parameter	Symbol	Min.	Typ.	Max.	Unit	Notes
Data Rate			1.063/1.25		Gbps	
Transmitter						
Center Wavelength	λC	1550	1570	1590	nm	
Spectral Width (-20dB)	Δλ			1	nm	
Average Output Power	POUT	0		5	dBm	1
Side-Mode Suppression Ratio	SMSR	30			dB	
Extinction Ratio	ER	9			dB	
Rise/Fall Time (20-80%)	Tr/Tf			0.26	ns	
POUT @Tx_Disable Asserted	POUT			-35	dBm	
Output Optical Eye	Compliant with IEEE 802.3					2
Receiver						
Center Wavelength	λC	1470	1490	1510	nm	
Receiver Sensitivity	Pmin			-24	dBm	3
Receiver Overload	Pmax	-3			dBm	
LOS De-Assert	LOSD			-25	dBm	
LOS Assert	LOSA	-35			dBm	
LOS Hysteresis		0.5			dB	3

Notes:

1. Output power is power coupled into a 9/125μm single-mode fiber.
2. Filtered, measured with a PRBS 2^7-1 test pattern @1.25Gbps.
3. Minimum average optical power is measured at BER less than $1E^{-12}$, with 1.25Gbps, 2^7-1 PRBS and ER=9dB.

Pin Descriptions

Pin	Symbol	Name/Description	Plug Sequence	Notes
1	VeeT	Transmitter Ground.	1	5
2	Tx_Fault	Transmitter Fault Indication.	3	1
3	Tx_Disable	Transmitter Disable. Module disables on “high” or “open.”	3	2
4	MOD-DEF2	Module Definition 2. 2-Wire Serial ID Interface.	3	3
5	MOD-DEF1	Module Definition 1. 2-Wire Serial ID Interface.	3	3
6	MOD-DEF0	Module Definition 0. Grounded within the module.	3	3
7	Rate Select	Not Connected. Function not available.	3	
8	LOS	Loss of Signal.	3	4
9	VeeR	Receiver Ground.	1	5
10	VeeR	Receiver Ground.	1	5
11	VeeR	Receiver Ground.	1	5
12	RD-	Inverse Received Data out.	3	6
13	RD+	Received Data out.	3	7
14	VeeR	Receiver Ground.	1	5
15	VccR	3.3 ± 5% Receiver Power.	2	7
16	VccT	3.3 ± 5% Transmitter Power.	2	7
17	VeeT	Transmitter Ground.	1	5
18	TD+	Transmitter Data In.	3	8
19	TD-	Inverse Transmitter Data In.	3	8
20	VeeT	Transmitter Ground.	1	5

Notes:

1. Tx_Fault is an open collector/drain output, which should be pulled up with a 4.7kΩ to 10kΩ resistor on the host board. Pull-up voltage between 2.0V and VccT/R+0.3V. When “high,” output indicates a laser fault of some kind. “Low” indicates normal operation. In the “low” state, the output will be pulled to <0.8V.
2. Tx_Disable is an input that is used to shut down the transmitter optical output. It is pulled up within the module with a 4.7kΩ to 10kΩ resistor. Its states are:

   Low (0V – 0.8V): Transmitter On.

   (>0.8V and <2.0V): Undefined.

   High (2.0V – 3.465V): Transmitter Disabled.

   Open: Transmitter Disabled.
3. MOD-DEF0, 1, 2. These are the module definition pins. They should be pulled up with a 4.7kΩ to 10kΩ resistor on the host board. The pull-up voltage shall be VccT or VccR.

   MOD-DEF0 is grounded by the module to indicate that the module is present.

   MOD-DEF1 is the clock line of 2-wire serial interface for optional serial ID.

MOD-DEF2 is the data line of 2-wire serial interface for optional serial ID.

4. LOS (Loss of Signal) is an open collector/drain output, which should be pulled up with a 4.7kΩ to 10kΩ resistor. Pull-up voltage between 2.0V and VccT/R+0.3V. When “high,” this output indicates the received optical power is below the worst-case receiver sensitivity (as defined by the standard in use). “Low” indicates normal operation. In the “low” state, the output will be pulled to <0.8V.
5. VeeR and VeeT may be internally connected within the SFP module.
6. RD-/+: these are the differential receiver outputs. They are AC coupled 100Ω differential lines which should be terminated with 100Ω (differential) at the user SERDES. The AC coupling is done inside the module and is thus not required on the host board. The voltage swing on these lines will be between 400mV and 2000mV differential (200mV –1000mV single-ended) when properly terminated.
7. VccR and VccT are the receiver and transmitter power supplies. They are defined as 3.3V±5% at the SFP connector pin. Maximum supply current is 300mA. Recommended host board power supply filtering is shown below. Inductors with DC resistance of less than 1Ω should be used in order to maintain the required voltage at the SFP input pin with 3.3V supply voltage. When the recommended supply-filtering network is used, hot plugging of the SFP transceiver module will result in an in rush current of no more than 30mA greater than the steady state value. VccR and VccT may be internally connected within the SFP transceiver module.
8. TD-/+: these are the differential transmitter inputs. They are AC-coupled, differential lines with 100 differential terminations inside the module. The AC coupling is done inside the module and is thus not required on the host board. The inputs will accept differential swings of 400mV-2000mV (200mV-1000mV single-ended).

Pin-Out Connectors

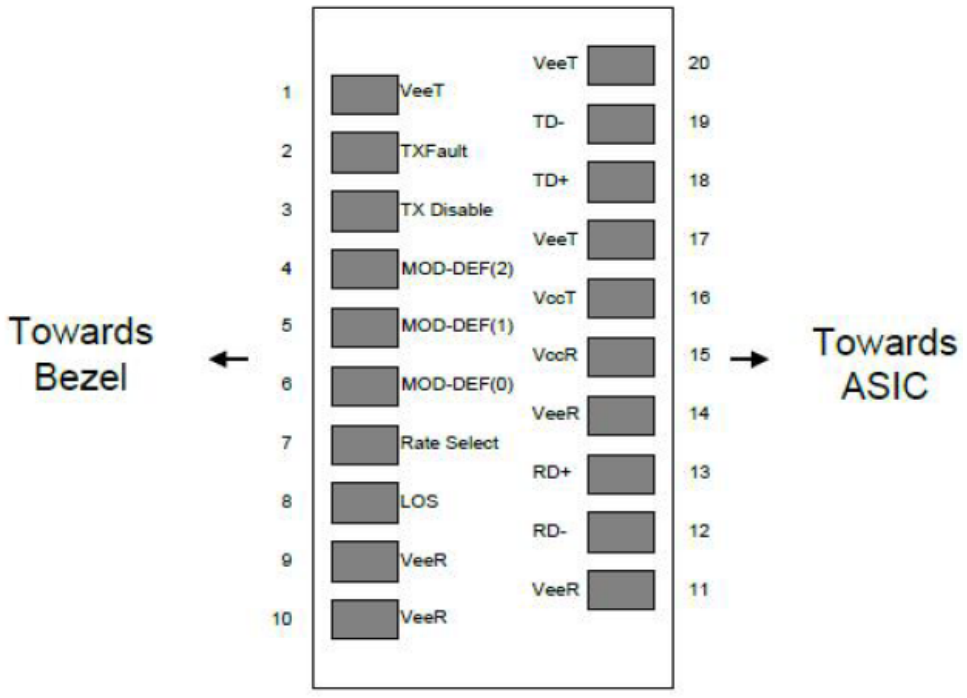

Recommended Circuit Schematic

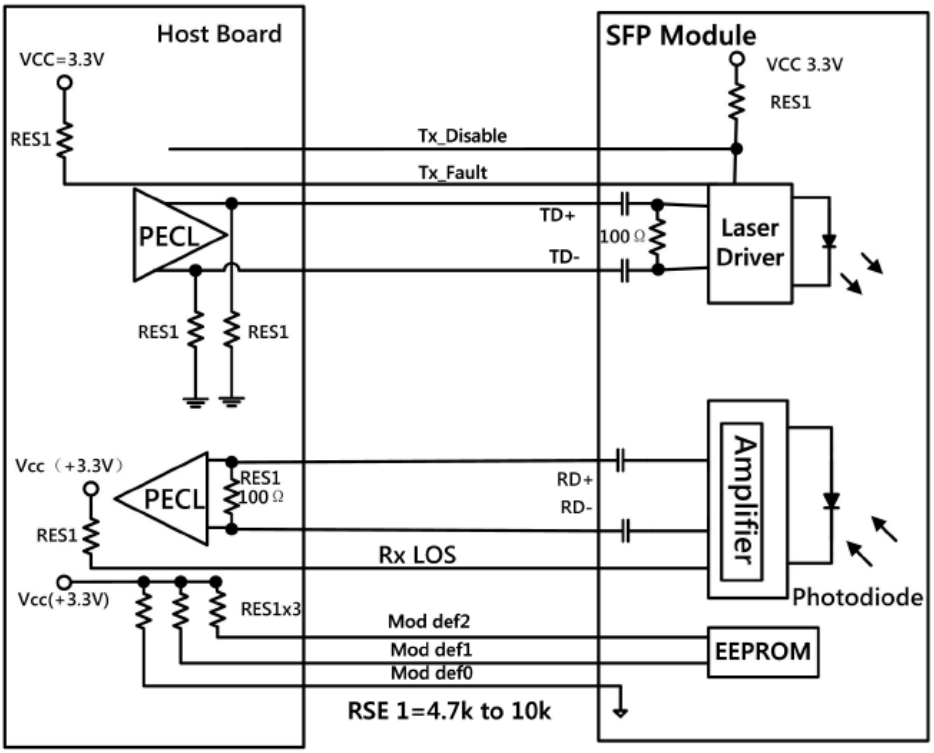

Mechanical Specifications

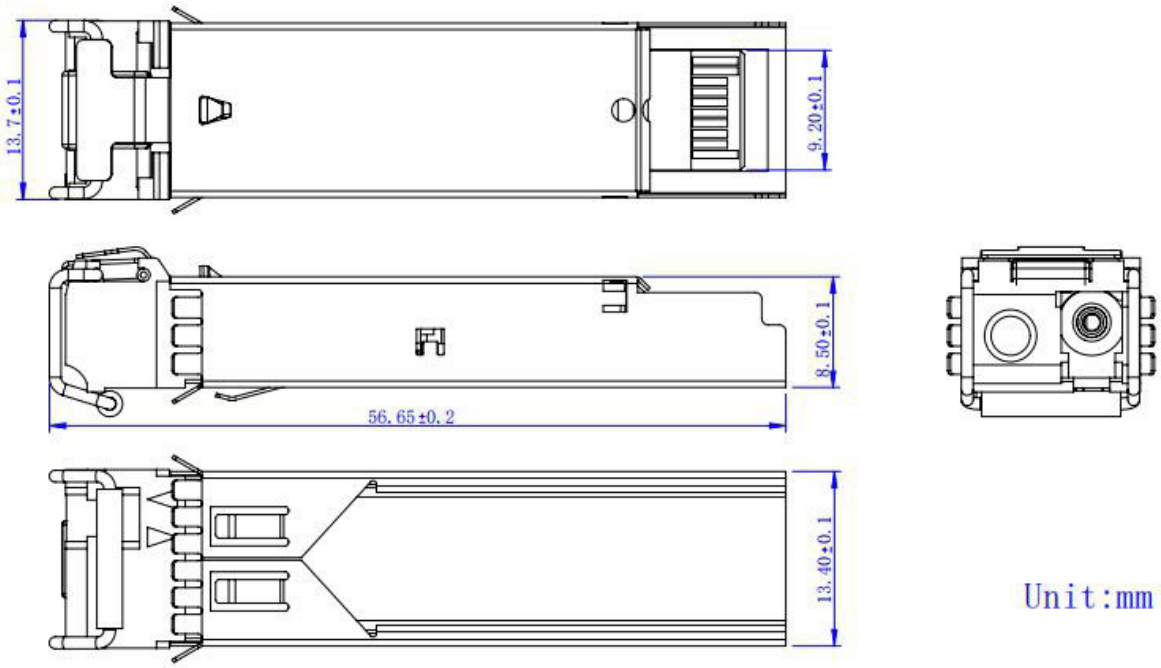

About AddOn Networks

In 1999, AddOn Networks entered the market with a single product. Our founders fulfilled a severe shortage for compatible, cost-effective optical transceivers that compete at the same performance levels as leading OEM manufacturers. Adhering to the idea of redefining service and product quality not previously had in the fiber optic networking industry, AddOn invested resources in solution design, production, fulfillment, and global support.

Combining one of the most extensive and stringent testing processes in the industry, an exceptional free tech support center, and a consistent roll-out of innovative technologies, AddOn has continually set industry standards of quality and reliability throughout its history.

Reliability is the cornerstone of any optical fiber network and is ingrained in AddOn's DNA. It has played a key role in nurturing the long-term relationships developed over the years with customers. AddOn remains committed to exceeding industry standards with certifications ranging from NEBS Level 3 to ISO 9001:2015 with every new development while maintaining the signature reliability of its products.



U.S. Headquarters

Email: sales@addonnetworks.com

Telephone: +1 877.292.1701

Fax: 949.266.9273

Europe Headquarters

Email: salesemea@addonnetworks.com

Telephone: +44 1285 842070