SFP-10GB-DW62-80-I-AO

MSA Compliant 10GBase-DWDM SFP+ Transceiver C-Band 50GHz (SMF, 1527.99nm, 80km, LC, DOM, -40 to 85C)

Features:

- SFF-8432 and SFF-8472 Compliance
- Single-mode Fiber
- Duplex LC Connector
- Hot Pluggable
- Metal with Lower EMI
- Industrial Temperature -40 to 85 Celsius
- RoHS Compliant and Lead Free
- Excellent ESD Protection

Applications:

- 8x/10x Fibre Channel
- 10x Gigabit Ethernet over DWDM
- Access and Enterprise

Product Description

This MSA compliant SFP+ transceiver provides 10GBase-DWDM throughput up to 80km over single-mode fiber (SMF) using a wavelength of 1527.99nm via an LC connector. It is capable of withstanding -40 to 85C environments and can operate at temperatures between -40 and 85C. All of our transceivers are built to comply with Multi-Source Agreement (MSA) standards and are uniquely serialized and tested for data-traffic and application to ensure seamless network integration. Additional product features include Digital Optical Monitoring (DOM) support which allows access to real-time operating parameters. We stand behind the quality of our products and proudly offer a limited lifetime warranty.

AddOn's transceivers are RoHS compliant and lead-free.

Absolute Maximum Ratings

Parameter	Symbol	Min.	Typ.	Max.	Unit	Notes
Maximum Supply Voltage	Vcc	-0.5		3.6	V	
Storage Temperature	Tstg	-40		85	°C	
Operating Case Temperature	Tc	-40		85	°C	
Operating Relative Humidity	RH	5		95	%	
Power Supply Current	Icc			2000	mW	
Bit Rate	BR			11.1	Gbps	1
Bit Error Rate	BER			$10E^{-12}$		2
Maximum Supported Link Length	Lmax			80	km	1

Notes:

1. 10GBASE-ZR, 10GBASE-ZW, and 1200-SM-LL-L 10GFC.
2. Tested with a 2^{31}-1 PRBS.

Electrical Characteristics

Parameter	Symbol	Min.	Typ.	Max.	Unit	Notes
Supply Voltage	Vcc	3.14	3.3	3.46	V	
Transmitter						
Input Differential Impedance	RIN	80	100	120	Ω	
Differential Data Input	VIN	180		700	mVp-p	
Transmit Disable Voltage	VDIS	2		Host_Vcc	V	
Transmit Enable Voltage	VEN	Vee		Vee+0.8	V	
Transmit Fault Assert Voltage	VFA	2		Host_Vcc	V	
Transmit Fault De-Assert Voltage	VFDA	Vee		Vee+0.4	V	
Receiver						
Differential Data Output	VOD	mVp-p	350		850	
Output Rise Time	Tr	pS	25			
Output Fall Time	Tf		25			
LOS Fault	VLOSft		2		Host_Vcc	
LOS Normal	VLOSnr		Vee		Vee+0.4	

Optical Characteristics

Parameter	Symbol	Min.	Typ.	Max.	Unit	Notes
Transmitter						
Side-Mode Suppression Ratio	SMSR	30			dB	
Optical Output Power	Pavg	0		4	dBm	
Extinction Ratio	ER	8.2			dB	
Average Launch Power of Off Transmitter	Poff			-30	dBm	
Relative Intensity Noise	RIN			-128	dB/Hz	
Receiver						
Center Wavelength	λC	1260		1620	nm	
Receiver Sensitivity	Rsense			-24	dBm	1
Receiver Sensitivity @80km Fiber	Rsense			-21	dBm	2
Receiver Overload		-7			dBm	
Optical Return Loss		27			dB	
LOS Assert	LOSA	-37			dBm	
LOS De-Assert	LOSD			-27	dBm	
LOS Hysteresis		0.5			dB	

Notes:

1. Measured at 1528-1600nm, ER=9dBm, PRBS 2^{31}-1, and BER better than $10E^{-12}$.
2. Loopback using 80km fiber (SMF-28).

Pin Descriptions

Pin	Symbol	Name/Description	Notes
1	VeeT	Transmitter Ground.	1
2	Tx_Fault	Transmitter Fault Out.	2
3	Tx_Disable	Transmitter Disable In. LVTTL.	3
4	SDA	Module Definition Identifiers.	4
5	SCL	Module Definition Identifiers.	4
6	MOD_ABS	Module Definition Identifiers.	4
7	RS0	Receiver Rate Select. LVTTL. Transmitter Rate Select.	5
8	LOS	Loss of Signal.	6
9	RS1	Receiver Rate Select. LVTTL. Transmitter Rate Select.	5
10	VeeR	Receiver Ground.	1
11	VeeR	Receiver Ground.	1
12	RD-	Receiver Negative Data Out. CML.	7
13	RD+	Receiver Positive Data Out. CML.	8
14	VeeR	Receiver Ground.	1
15	VccR	Receiver Power Supply.	9
16	VccT	Transmitter Power Supply.	9
17	VeeT	Transmitter Ground.	1
18	TD+	Transmitter Positive Data In. CML.	10
19	TD-	Transmitter Negative Data In. CML.	11
20	VeeT	Transmitter Ground.	1

Notes:

1. These pins should be connected to the signal ground on the host board.
2. Logic “1” Output = Laser fault (Laser off before Tx_Fault).
   Logic “0” Output = Normal operation.
   This pin is open collector compatible and should be pulled up to the Host_Vcc with a 10kΩ resistor.
3. Logic “1” Input (or No Connection) = Laser off.
   Logic “0” Input = Laser on.
   This pin is internally pulled up to the VccT with a 10kΩ resistor.
4. Serial ID with SFF-8472 diagnostics module definition pins should be pulled up to the Host_Vcc with 10kΩ resistors.
5. These pins have an internal 30kΩ pull-down to ground. A signal on either of these pins will not affect module performance.
6. Sufficient optical signal for potential BER < $1x10^{-12}$ = Logic “0.”
   Insufficient optical signal for potential BER < $1x10^{-12}$ = Logic “1.”
   This pin is open collector compatible and should be pulled up to the Host_Vcc with a 10kΩ resistor.

7. Light On = Logic “0” output receiver data output is internally AC coupled and series terminated with a 50Ω resistor.
8. Light On = Logic “1” output receiver data output is internally AC coupled and series terminated with a 50Ω resistor.
9. This pin should be connected to a filtered +3.3V power supply on the host board.
10. Logic “1” Input = Light on transmitter data inputs are internally AC coupled and terminated with a 100Ω resistor.
11. Logic “0” Input = Light on transmitter data inputs are internally AC coupled and terminated with a 100Ω resistor.

Pin Connectors

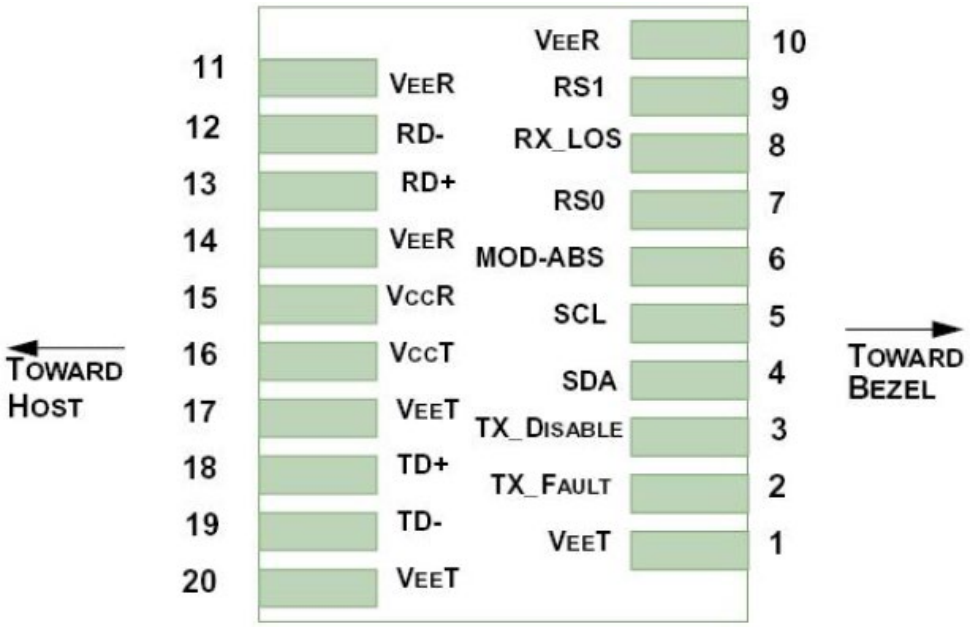

Recommended Circuit Schematic

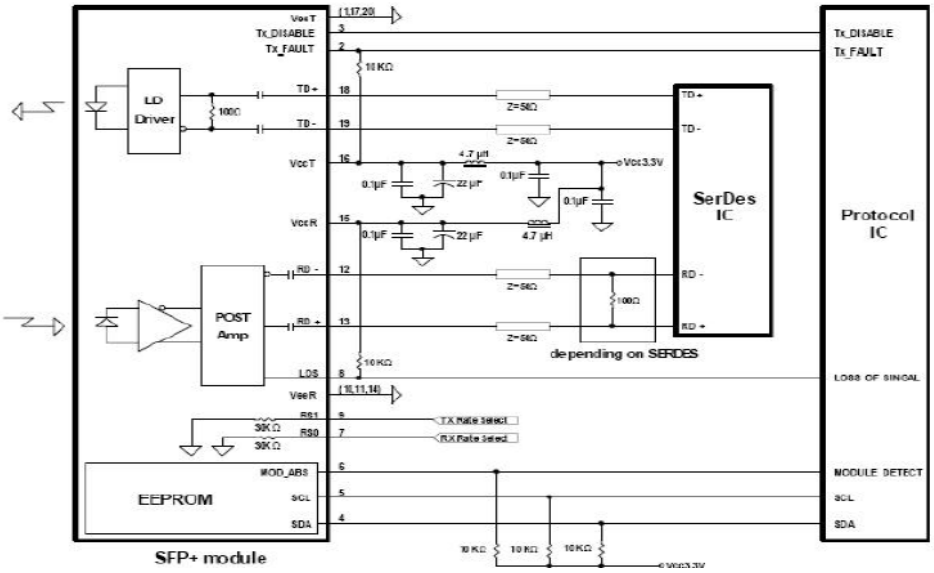

Mechanical Specifications

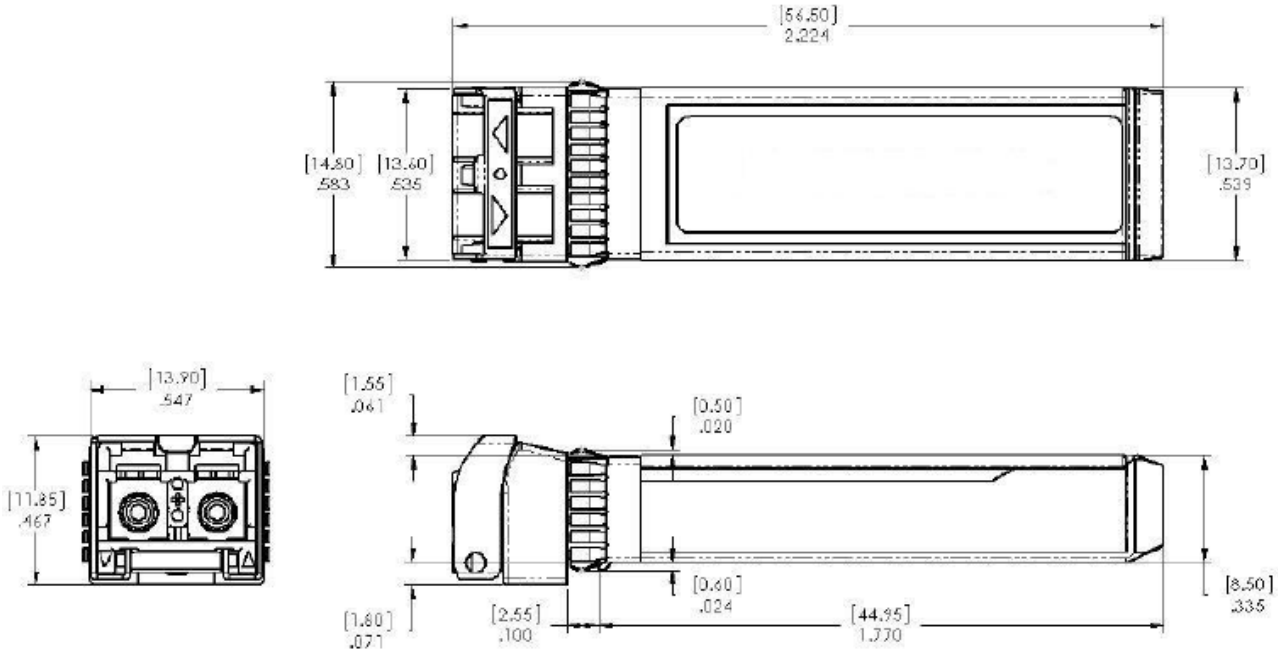

About AddOn Networks

In 1999, AddOn Networks entered the market with a single product. Our founders fulfilled a severe shortage for compatible, cost-effective optical transceivers that compete at the same performance levels as leading OEM manufacturers. Adhering to the idea of redefining service and product quality not previously had in the fiber optic networking industry, AddOn invested resources in solution design, production, fulfillment, and global support.

Combining one of the most extensive and stringent testing processes in the industry, an exceptional free tech support center, and a consistent roll-out of innovative technologies, AddOn has continually set industry standards of quality and reliability throughout its history.

Reliability is the cornerstone of any optical fiber network and is ingrained in AddOn's DNA. It has played a key role in nurturing the long-term relationships developed over the years with customers. AddOn remains committed to exceeding industry standards with certifications ranging from NEBS Level 3 to ISO 9001:2015 with every new development while maintaining the signature reliability of its products.

U.S. Headquarters

Email: sales@addonnetworks.com

Telephone: +1 877.292.1701

Fax: 949.266.9273

Europe Headquarters

Email: salesemea@addonnetworks.com

Telephone: +44 1285 842070