SFP-10GB-50DW54-80-AO

MSA Compliant 10GBase-DWDM SFP+ Transceiver C-Band 50GHz (SMF, 1534.25nm, 80km, LC, DOM)

Features:

- SFF-8432 and SFF-8472 Compliance
- Duplex LC Connector
- Commercial Temperature 0 to 70 Celsius
- Single-mode Fiber
- Hot Pluggable
- Excellent ESD Protection
- Metal with Lower EMI
- RoHS Compliant and Lead Free

Applications:

- 8x/10x Fibre Channel
- 10x Gigabit Ethernet over DWDM
- Access and Enterprise

Product Description

This MSA compliant SFP+ transceiver provides 10GBase-DWDM throughput up to 80km over single-mode fiber (SMF) using a wavelength of 1534.25nm via an LC connector. It can operate at temperatures between 0 and 70C. All of our transceivers are built to comply with Multi-Source Agreement (MSA) standards and are uniquely serialized and tested for data-traffic and application to ensure seamless network integration. Additional product features include Digital Optical Monitoring (DOM) support which allows access to real-time operating parameters. We stand behind the quality of our products and proudly offer a limited lifetime warranty.

AddOn's transceivers are RoHS compliant and lead-free.

Wavelength Guide

Channel #	Center Wavelength (nm)	Channel #	Center Wavelength (nm)
18	1563.05	**40**	1545.32
19	1562.23	**41**	1544.53
20	1561.42	**42**	1543.73
21	1560.61	**43**	1542.94
22	1559.79	**44**	1542.14
23	1558.98	**45**	1541.35
24	1558.17	**46**	1540.56
25	1557.36	**47**	1539.77
26	1556.55	**48**	1538.98
27	1555.75	**49**	1538.19
28	1554.94	**50**	1537.40
29	1554.13	**51**	1536.61
30	1553.33	**52**	1535.82
31	1552.52	**53**	1535.04
32	1551.72	**54**	1534.25
33	1550.92	**55**	1533.47
34	1550.12	**56**	1532.68
35	1549.32	**57**	1531.90
36	1548.51	**58**	1531.12
37	1547.72	**59**	1530.33
38	1546.92	**60**	1529.55
39	1546.12	**61**	1528.77

Absolute Maximum Ratings

Parameter	Symbol	Min.	Typ.	Max.	Unit	Notes
Storage Temperature	Tstg	-40		85	°C	
Operating Temperature	Tc	0		70	°C	
Supply Current	Icc		450	500	mA	1
Data Rate	DR	1.2	10.3125	11.3	Gbps	2
Maximum Supply Voltage	Vcc	-0.5		4.0	V	1
Bit Error Rate	BER			10^{-12}		

Notes:

1. For electrical power interface.
2. IEEE 802.3ae.

Electrical Characteristics

Parameter	Symbol	Min.	Typ.	Max.	Unit	Notes
Power Supply Voltage	Vcc	3.14	3.3	3.46	V	
Transmitter						
Input Differential Impedance	RIN		100			
Differential Data Input Swing	VIN,pp	300		850	mV	
Transmit Disable Voltage	VD	2		Vcc	V	
Transmit Enable Voltage	VEN	Vee		Vee+0.8	V	
Receiver						
Differential Data Output Swing	VOUT,pp	300		850	mV	
Data Output Rise/Fall Time (20-80%)	Tr/Tf	28			ps	
LOS Fault	Vlosa	2		Host_Vcc	V	
LOS Normal	Vlosd	Vee		Vee+0.5	V	

Optical Characteristics

Parameter	Symbol	Min.	Typ.	Max.	Unit	Notes
Transmitter						
Output Optical Power	Ptx	0		4	dBm	1
Optical Center Wavelength	λC	λC-0.05	λC	λC+0.05		2
Extinction Ratio	ER	9			dB	
Spectral Width (-20dB)	Δλ			0.6	nm	
Side Mode Suppression Ratio	SMSR	30			dB	
Relative Intensity Noise	RIN			-128	dB/Hz	
Transmitter Dispersion Penalty	TDP			3.2	dB	
Launch Power of Off Transmitter	Poff			-30	dBm	1
Receiver						
Optical Center Wavelength	λC	1260		1620	nm	
Average Receive Power	Prx	-24		-7	dBm	
Receiver Sensitivity @10.3Gbps	S			-24	dBm	3
Receiver Reflectance	RR			-27	dB	
LOS Assert	LOSA	-35			dBm	
LOS De-Assert	LOSD			-27	dBm	
LOS Hysteresis	LOSH	0.5			dB	

Notes:

1. Average.
2. λ = specified ITU grid wavelength.
3. Measured with the PRBS 2^{31}-1 test mode and BER<10^{-12}.

Pin Descriptions

Pin	Symbol	Name/Description	Notes
1	VeeT	Transmitter Ground. Common with Receiver Ground.	1
2	Tx_Fault	Transmitter Fault.	
3	Tx_Disable	Transmitter Disable. Laser output disables on “high” or “open.”	2
4	SDA	2-Wire Serial ID Interface Data Line.	3
5	SCL	2-Wire Serial ID Interface Clock Line.	3
6	MOD_ABS	Module Absent. Grounded within the module.	3
7	RSO	Rate Select 0. Not used.	
8	LOS	Loss of Signal Indication. "Logic 0" indicates normal operation.	4
9	RS1	Rate Select 1. Not used.	1
10	VeeR	Receiver Signal Ground. Common with Transmitter Ground.	1
11	VeeR	Receiver Signal Ground. Common with Transmitter Ground.	1
12	RD-	Inverse Received Data Out. AC Coupled.	
13	RD+	Non-Inverted Receiver Data Out. AC Coupled.	
14	VeeR	Receiver Signal Ground. Common with Transmitter Ground.	1
15	VccR	Receiver Power Supply.	
16	VccT	Transmitter Power Supply.	
17	VeeT	Transmitter Signal Ground. Common with Receiver Ground.	1
18	TD+	Transmitter Non-Inverted Data In. AC Coupled.	
19	TD-	Transmitter Inverted Data In. AC Coupled.	
20	VeeT	Transmitter Signal Ground.	1

Notes:

1. Circuit ground is isolated from the chassis ground.
2. Disabled: Tdis>2V or open. Enabled: Tdis<0.8V.
3. Should be pulled up with 4.7kΩ to 10kΩ on the host board to a voltage between 2V and 3.46V.
4. LOS is open collector output.

Block Diagram of Transceiver

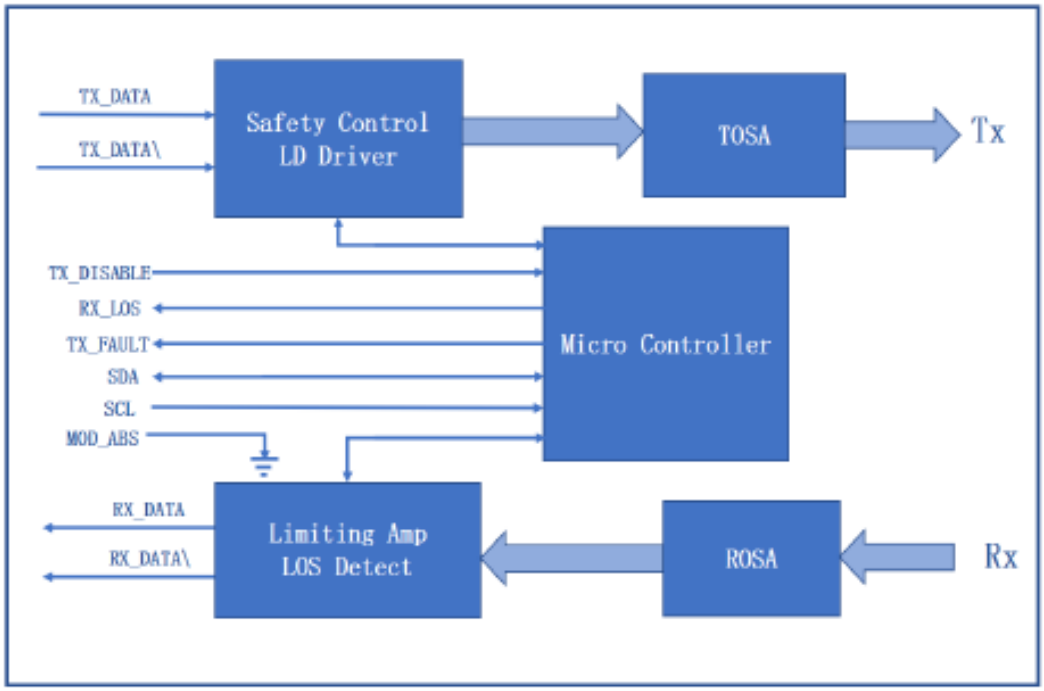

Electrical Pad Layout

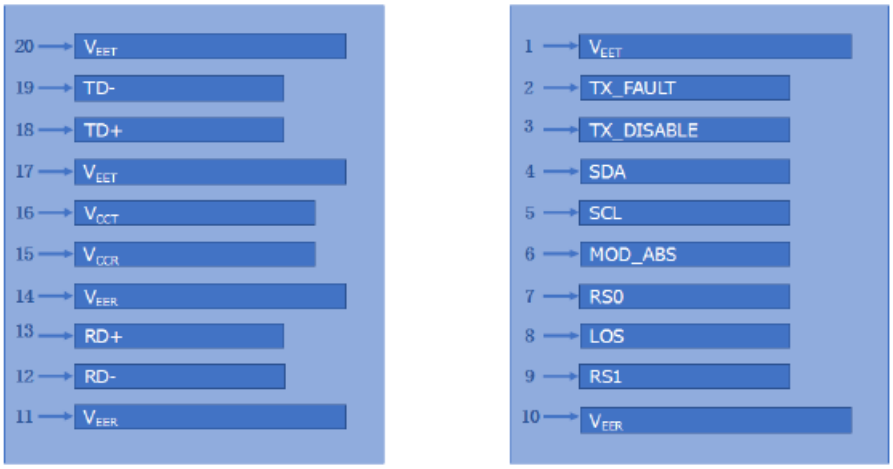

Top of Board

Bottom of Board

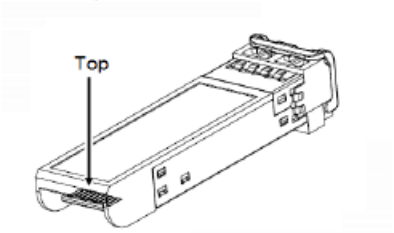

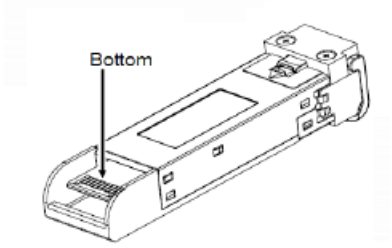

Mechanical Specifications

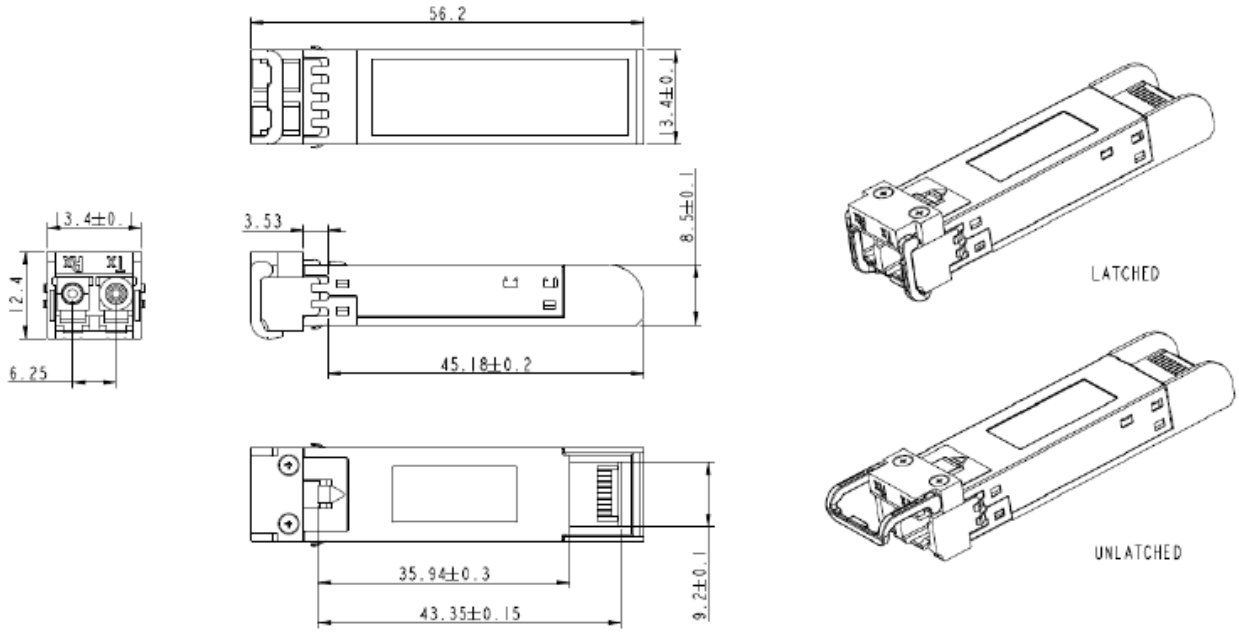

About AddOn Networks

In 1999, AddOn Networks entered the market with a single product. Our founders fulfilled a severe shortage for compatible, cost-effective optical transceivers that compete at the same performance levels as leading OEM manufacturers. Adhering to the idea of redefining service and product quality not previously had in the fiber optic networking industry, AddOn invested resources in solution design, production, fulfillment, and global support.

Combining one of the most extensive and stringent testing processes in the industry, an exceptional free tech support center, and a consistent roll-out of innovative technologies, AddOn has continually set industry standards of quality and reliability throughout its history.

Reliability is the cornerstone of any optical fiber network and is ingrained in AddOn's DNA. It has played a key role in nurturing the long-term relationships developed over the years with customers. AddOn remains committed to exceeding industry standards with certifications ranging from NEBS Level 3 to ISO 9001:2015 with every new development while maintaining the signature reliability of its products.

U.S. Headquarters

Email: sales@addonnetworks.com

Telephone: +1 877.292.1701

Fax: 949.266.9273

Europe Headquarters

Email: salesemea@addonnetworks.com

Telephone: +44 1285 842070