ADD-QMUSBR-AOC1M

Multiple OEM Compatible TAA Compliant to Brocade® (Formerly) 10GE-SFPP-AOC-0101 Compatible 40GBase-AOC QSFP+ to 4xSFP+ Active Optical Cable (850nm, MMF, 1m)

Features:

- Compliant to Standard SFF-8436 for QSFP+ and Standard SFF-8431 for SFP+
- Reliable VCSEL and PIN Photonic Devices
- High-Speed/High-Density: Supports up to 4x100Gbps Bi-Directional Operation
- Excellent High-Speed Signal Integrity
- Operating Case Temperature: 0 to 70 Celsius
- I2C Standard Management Interface
- RoHS Compliant and Lead-Free

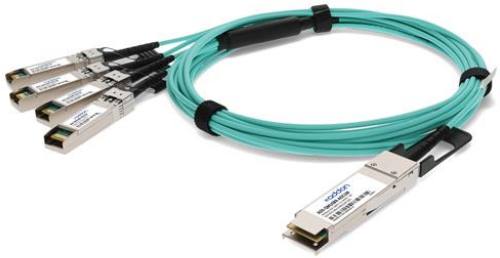

Applications:

- Proprietary High-Speed/High-Density Data
- 10G/40G Ethernet
- High Performance Computing, Server and Data Storage

Product Description

This Multiple OEM Compatible to Brocade® (Formerly) 10GE-SFPP-AOC-0101 dual OEM compatible 40GBase-AOC QSFP+ to 4xSFP+ active optical cable has a maximum reach of 1.0m (3.3ft). It is 100% Brocade® (Formerly) compatible and has been programmed to allow for connection to multiple OEMs. These OEMs include Avago, D-Link, Edge-corE, F5 Networks, Finisar, Fortinet, Linksys, Mellanox, NetAPP, Zyxel and more. This cable is also uniquely serialized and data-traffic and application tested to ensure that it is compliant and functional. This direct attach cable will initialize and perform identically to Brocade® (Formerly) and the multiple OEM's indvidual cables and is built to meet or exceed Brocade® (Formerly)'s specifications, and comply with MSA (Multi-Source Agreement) standards. We stand behind the quality of our products and proudly offer a limited lifetime warranty.

AddOn's transceivers are RoHS compliant and lead-free.

TAA refers to the Trade Agreements Act (19 U.S.C. & 2501-2581), which is intended to foster fair and open international trade. TAA requires that the U.S. Government may acquire only "U.S.-made or designated country end products."

TAA COMPLIANT

Absolute Maximum Ratings

Parameter	Symbol	Min.	Typ.	Max.	Unit	Notes
Storage Temperature	Tstg	-40		85	˚C	
Operating Temperature	Tc	0	25	70	˚C	
Relative Humidity	RH	5		85	;;;

Optical Characteristics

Parameter	Symbol	Min.	Typ.	Max.	Unit	Notes
Transmitter						
Reference Differential Input Impedance	Zd		100		Ω	1
Optical Return Loss Tolerance				12	dB	
Differential Data Input Swing	VIN,pp	180		1200	mV	
Differential Data Input Threshold			50		mV	2
Receiver						
Reference Differential Input Impedance	Zd		100		Ω	1
Differential Data Output Swing	VOUT,pp	0		800	mV	
Pre-Emphasis Pulse Amplitude Percentage		0			%	3
		10			%	
		20			%	
		40			%	
Pre-Emphasis Pulse Duration			30		ps	
Signal Speed			4*10.3		Gbps	
Differential Data Output Swing		150		850	mV	
Differential Data Output Swing When Squelched				50	mV	
Rise/Fall Time		24			ps	

Notes:

1. AC coupled inside the AOC module.
2. Input swing to trigger Tx_Squelch.
3. User-selectable. Percentage is the ratio of pre-emphasis amplitude to output swing.

Pin Descriptions (QSFP+ End)

Pin	Symbol	Name/Description	Notes
1	GND	Transmitter Ground (Common with Receiver Ground).	1
2	Tx2-	Transmitter Inverted Data Input.	
3	Tx2+	Transmitter Non-Inverted Data Input.	
4	GND	Transmitter Ground (Common with Receiver Ground).	1
5	Tx4-	Transmitter Inverted Data Input.	
6	Tx4+	Transmitter Non-Inverted Data Input.	
7	GND	Transmitter Ground (Common with Receiver Ground).	1
8	ModSelL	Module Select.	2
9	ResetL	Module Reset.	2
10	VccRx	+3.3V Receiver Power Supply.	
11	SCL	2-Wire Serial Interface Clock.	2
12	SDA	2-Wire Serial Interface Data.	2
13	GND	Transmitter Ground (Common with Receiver Ground).	1
14	Rx3+	Receiver Non-Inverted Data Output.	
15	Rx3-	Receiver Inverted Data Output.	
16	GND	Transmitter Ground (Common with Receiver Ground).	1
17	Rx1+	Receiver Non-Inverted Data Output.	
18	Rx1-	Receiver Inverted Data Output.	
19	GND	Transmitter Ground (Common with Receiver Ground).	1
20	GND	Transmitter Ground (Common with Receiver Ground).	1
21	Rx2-	Receiver Inverted Data Output.	
22	Rx2+	Receiver Non-Inverted Data Output.	
23	GND	Transmitter Ground (Common with Receiver Ground).	1
24	Rx4-	Receiver Inverted Data Output.	1
25	Rx4+	Receiver Non-Inverted Data Output.	
26	GND	Transmitter Ground (Common with Receiver Ground).	1
27	ModPrs1	Module Present.	
28	IntL	Interrupt.	2
29	VccTx	+3.3V Transmitter Power Supply.	
30	Vcc1	+3.3V Power Supply.	
31	LPMode	Low-Power Mode.	2
32	GND	Transmitter Ground (Common with Receiver Ground).	1
33	Tx3+	Transmitter Non-Inverted Data Input.	
34	Tx3-	Transmitter Inverted Data Input.	
35	GND	Transmitter Ground (Common with Receiver Ground).	1
36	Tx1+	Transmitter Non-Inverted Data Input.	
37	Tx1-	Transmitter Inverted Data Input.	
38	GND	Transmitter Ground (Common with Receiver Ground).	1

Notes:

1. The module signal grounds are isolated from the module case.
2. This is an open collector/drain output that, on the host board, requires a 4.7kΩ to 10kΩ pull-up resistor to the Host_Vcc.

Electrical Pin-Out Details (QSFP+ End)

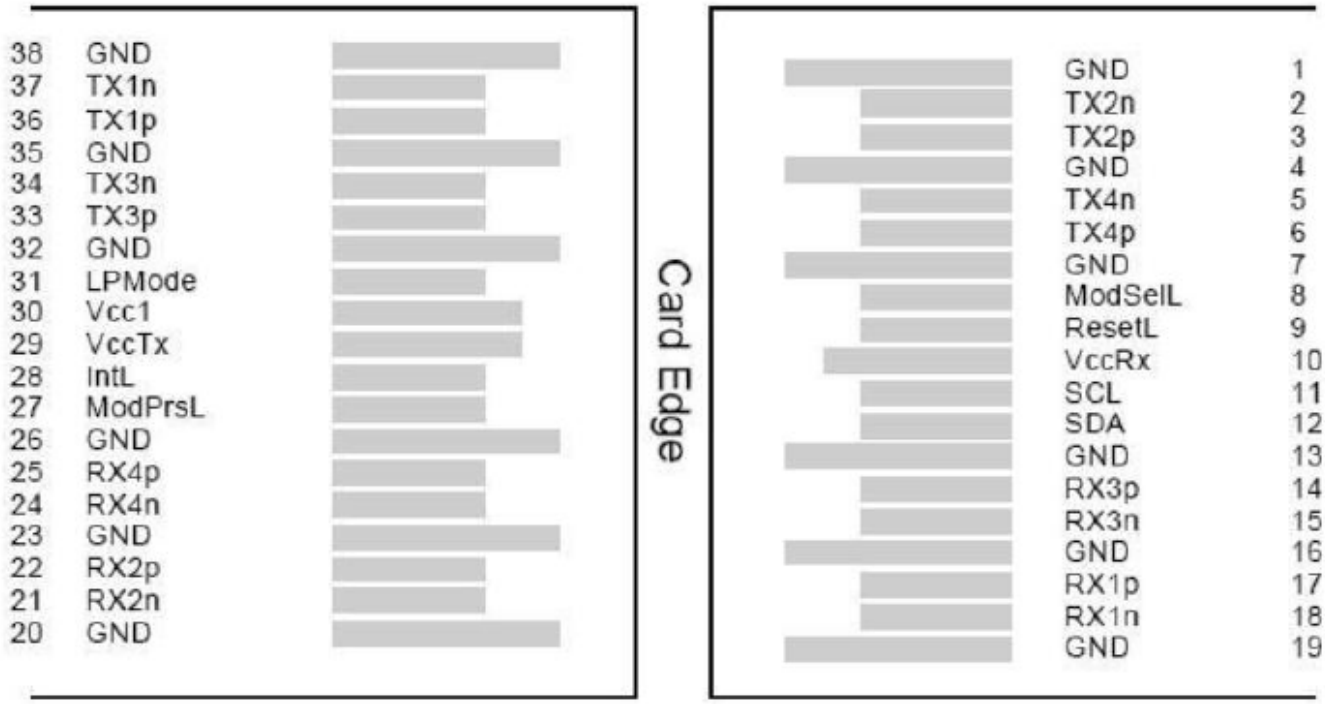

Pin Descriptions (SFP+ End)

Pin	Symbol	Name/Description	Notes
1	VeeT	Transmitter Ground.	1
2	Tx_Fault	Transmitter Fault. LVTTL-O. “High” indicates a fault condition.	2
3	Tx_Disable	Transmitter Disable. LVTTL-I. “High” or “open” disables the transmitter.	3
4	SDA	2-Wire Serial Interface Data. LVCMOS-I/O. MOD_DEF2.	4
5	SCL	2-Wire Serial Interface Clock. LVCMOS-I/O. MOD_DEF1.	4
6	MOD_ABS	Module Absent. Output. Connected to the VeeT or VeeR in the module.	5
7	RS0	Rate Select 0. Not used. Presents high input impedance.	
8	Rx_LOS	Receiver Loss of Signal. LVTTL-O.	2
9	RS1	Rate Select 1. Not used. Presents high input impedance.	
10	VeeR	Receiver Ground.	1
11	VeeR	Receiver Ground.	1
12	RD-	Inverse Received Data Out. CML-O.	
13	RD+	Receiver Data Out. CML-O.	
14	VeeR	Receiver Ground.	
15	VccR	+3.3V Receiver Power.	
16	VccT	+3.3V Transmitter Power.	
17	VeeT	Transmitter Ground.	1
18	TD+	Transmitter Data In. CML-I.	
19	TD-	Inverse Transmitter Data In. CML-I.	
20	VeeT	Transmitter Ground.	1

Notes:

1. The module signal grounds are isolated from the module case.
2. This is an open collector/drain output that, on the host board, requires a 4.7kΩ to 10kΩ pull-up resistor to the Host_Vcc.
3. This input is internally biased high with a 4.7kΩ to 10kΩ pull-up resistor to the VccT.
4. 2-wire serial interface clock and data lines require an external pull-up resistor dependent on the capacitance load.
5. This is a ground return that, on the host board, requires a 4.7kΩ to 10kΩ pull-up resistor to the Host_Vcc.

Electrical Pin-Out Details (SFP+ End)

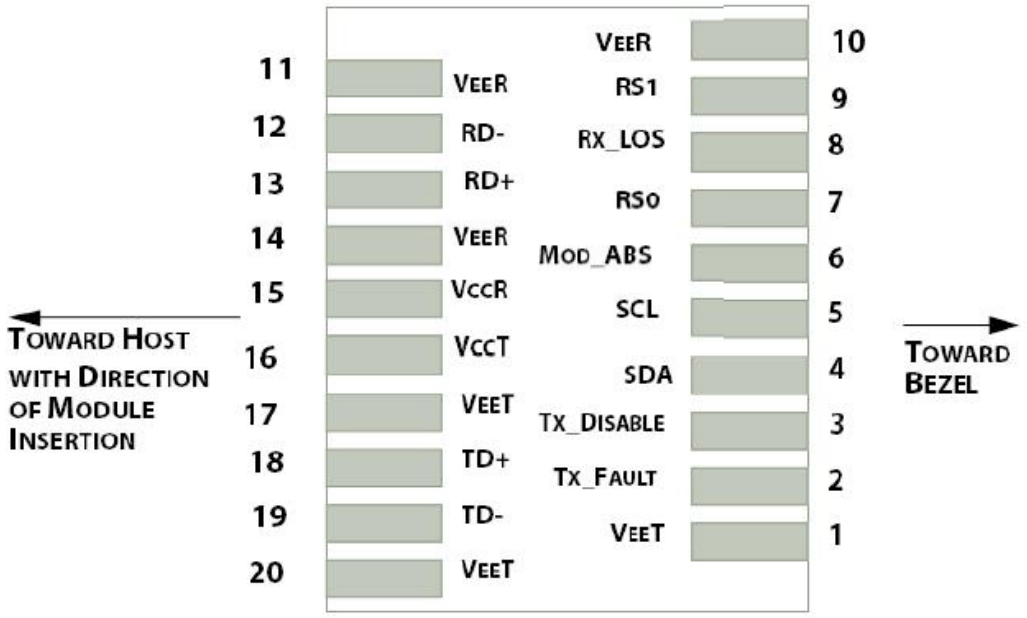

Application Interface Circuit

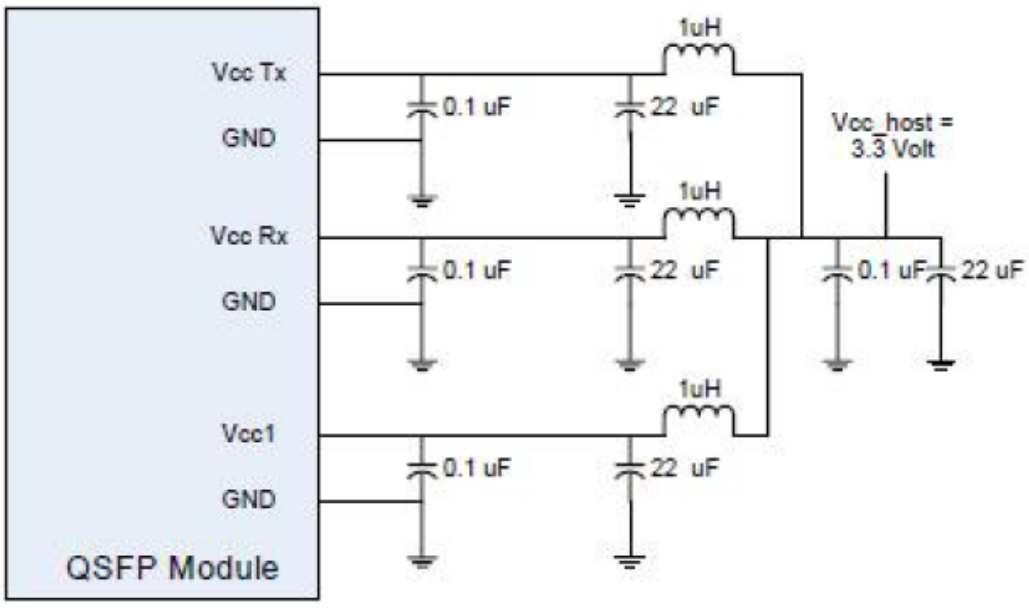

Active Optical Cable Specifications

Parameter	Symbol	Min.	Typ.	Max.	Unit
AOC Cable Length (L1 ≤ 5m)	L1	L – 0.06	L	L + 0.06	M
AOC Cable Length (L1 > 5m)	L1	L*95%	L	L*105%	M
AOC Cable Length of Branch (L2 ≤ 3m)	L2	L – 0.06	L	L + 0.06	M
Module Retention		90		170	N
Module Insertion		0		18	N
Module Extraction		0		25	N
Cable Pull Strength - Apply Load at 0˚		25			N
Cable Pull Strength - Apply Load at 90˚		20			N
Cable Bending Radius		30			mm
Insertion/Removal Cycles		50			cycles

Mechanical Specifications

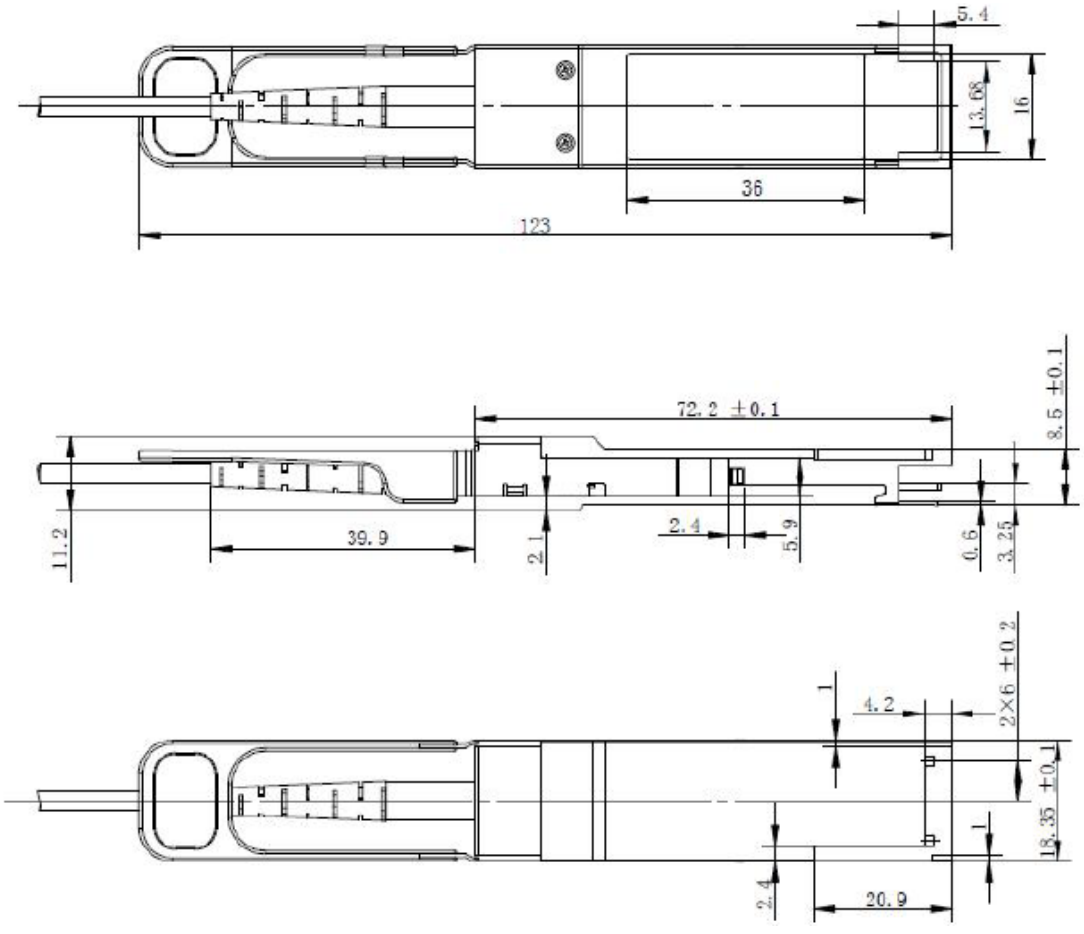

QSFP+ End

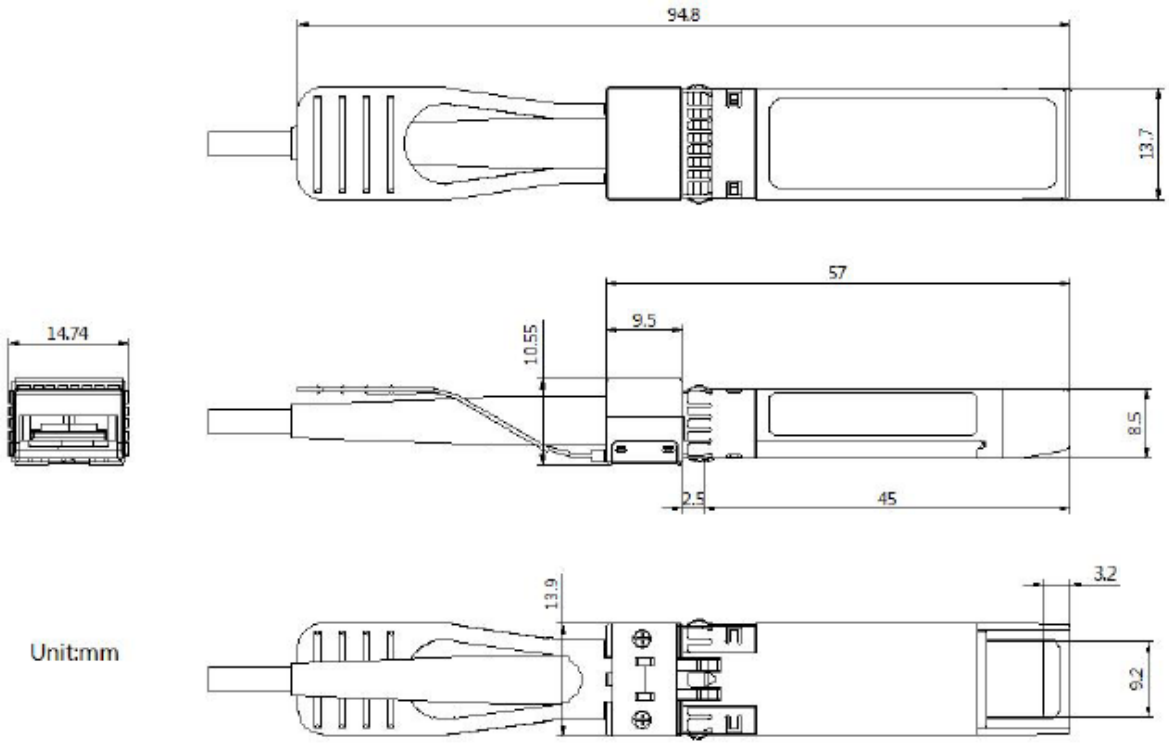

SFP+ End

About AddOn Networks

In 1999, AddOn Networks entered the market with a single product. Our founders fulfilled a severe shortage for compatible, cost-effective optical transceivers that compete at the same performance levels as leading OEM manufacturers. Adhering to the idea of redefining service and product quality not previously had in the fiber optic networking industry, AddOn invested resources in solution design, production, fulfillment, and global support.

Combining one of the most extensive and stringent testing processes in the industry, an exceptional free tech support center, and a consistent roll-out of innovative technologies, AddOn has continually set industry standards of quality and reliability throughout its history.

Reliability is the cornerstone of any optical fiber network and is ingrained in AddOn's DNA. It has played a key role in nurturing the long-term relationships developed over the years with customers. AddOn remains committed to exceeding industry standards with certifications ranging from NEBS Level 3 to ISO 9001:2015 with every new development while maintaining the signature reliability of its products.



U.S. Headquarters

Email: sales@addonnetworks.com

Telephone: +1 877.292.1701

Fax: 949.266.9273

Europe Headquarters

Email: salesemea@addonnetworks.com

Telephone: +44 1285 842070