SFP-10GB-DW3140-40-I-AO

MSA Compliant 10GBase-DWDM SFP+ Transceiver 100GHz (SMF, 1552.52nm to 1545.32nm, 40km, LC, DOM, -40 to 85C)

Features:

- Supports 9.95 to 11.3Gbps Bit Rates
- 100GHz ITU-Based Channel Spacing (C-Band)
- Up to 40km Link Length @9.95 to 11.3Gbps
- APD Receiver with Limiting Amplifier
- Duplex LC Connector
- Monolithic EML Tunable TOSA
- Positive Power Supply Lines: 3.3V
- Low Power Consumption: 2.7w
- RoHS Compliant and Lead-Free
- Operating Temperature: -40 to 85 Celsius

Applications:

- Gigabit Ethernet over CWDM
- 10x Gigabit Ethernet over DWDM
- Access, Metro and Enterprise

Product Description

This MSA compliant SFP+ transceiver provides 10GBase-DWDM throughput up to 40km over single-mode fiber (SMF) using a wavelength of 1552.52nm to 1545.32nm via an LC connector. It is capable of withstanding -40 to 85C environments and can operate at temperatures between -40 and 85C. It has been programmed, uniquely serialized, and tested for data-traffic and application to ensure that it will initialize and perform identically. All of our transceivers comply with Multi-Source Agreement (MSA) standards to provide seamless network integration. Additional product features include Digital Optical Monitoring (DOM) support which allows access to real-time operating parameters. We stand behind the quality of our products and proudly offer a limited lifetime warranty.

AddOn's transceivers are RoHS compliant and lead-free.

ITU Channel Wavelength Guide

ITU Channel	Frequency (THz)	Center Wavelength (nm)	ITU Channel	Frequency (THz)	Center Wavelength (nm)
11	191.1	1568.11	**36**	193.6	1548.51
12	191.2	1567.95	**37**	193.7	1547.72
13	191.3	1567.13	**38**	193.8	1546.92
14	191.4	1566.31	**39**	193.9	1546.12
15	191.5	1565.50	**40**	194.0	1545.32
16	191.6	1564.68	**41**	194.1	1544.53
17	191.7	1563.86	**42**	194.2	1543.73
18	191.8	1563.05	**43**	194.3	1542.94
19	191.9	1562.23	**44**	194.4	1542.14
20	192.0	1561.42	**45**	194.5	1541.35
21	192.1	1560.61	**46**	194.6	1540.56
22	192.2	1559.79	**47**	194.7	1539.77
23	192.3	1558.98	**48**	194.8	1538.98
24	192.4	1558.17	**49**	194.9	1538.19
25	192.5	1557.36	**50**	195.0	1537.4
26	192.6	1556.55	**51**	195.1	1536.61
27	192.7	1555.75	**52**	195.2	1535.82
28	192.8	1554.94	**53**	195.3	1535.04
29	192.9	1554.13	**54**	195.4	1534.25
30	193.0	1553.33	**55**	195.5	1533.47
31	193.1	1552.52	**56**	195.6	1532.68
32	193.2	1551.72	**57**	195.7	1531.9
33	193.3	1550.92	**58**	195.8	1531.12
34	193.4	1550.12	**59**	195.9	1530.33
35	193.5	1549.32	**60**	196.0	1529.55

Absolute Maximum Ratings

Parameter	Symbol	Min.	Typ.	Max.	Unit	Notes
Maximum Supply Voltage	Vcc	0		3.6	V	
Storage Temperature	Tstg	-40		85	°C	
Operating Case Temperature	Tc	-40		85	°C	
Operating Relative Humidity	RH	5		85	%	
Storage Relative Humidity	RH	5		95	%	
Power Consumption				2.7	W	

Electrical Characteristics

Parameter	Symbol	Min.	Typ.	Max.	Unit	Notes
Power Supply Voltage	Vcc	3.135	3.3	3.465	V	
Transmitter						
Differential Data Input Swing	VIN	170		700	mV	
Input Differential Impedance	ZIN		100		Ω	
Transmitter Disable Voltage	VDIS	2.0		Vcc	V	
Transmitter Enable Voltage	VEN	0		0.8	V	
Receiver						
Differential Data Output Swing	VOUT	300		850	mV	
Output Differential Impedance	ZOUT		100		Ω	
LOS Assert Voltage	VLOSA	2.0		Vcc	V	
LOS De-Assert Voltage	VLOSD	0		0.8	V	

Timing Characteristics

Parameter	Symbol	Min.	Typ.	Max.	Unit	Notes
Module Initialize Time	Tinit			20	s	
Module Channel Switch Time	Tsel			200	ms	

Optical Characteristics

Parameter	Symbol	Min.	Typ.	Max.	Unit	Notes
Transmitter (10G & 1.25G)						
Average Output Power	PAVE	-2		3	dBm	1
Optical Wavelength	λ	As Per ITU-T 694.1, 100GHz Spacing			nm	2
Center Frequency Spacing	Δv	100			GHz	
Center Frequency Stability	-	-12.5		+12.5	GHz	
Side Mode Suppression Ratio	SMSR	30			dB	
Average Output Power (Laser Off)	Poff			-30	dBm	
Extinction Ratio	ER	8.2			dB	3
Dispersion Penalty	DP			2	dB	
Relative Intensity Noise	RIN			-128	dB/Hz	
Optical Return Loss Tolerance	ORLT	21			dB	
Receiver (10G)						
Optical Center Wavelength		1260		1600	nm	
Received Sensitivity	RSENS			-23	dBm	4
Optical Power Overload	POL			-7	dBm	
Receiver Reflectance	RFL			-27	dB	
Rx_LOS of Signal Assert	LOSA	-40			dBm	
Rx_LOS of Signal De-Assert	LOSD			-25	dBm	
Rx_LOS of Signal Hysteresis	LOSH	0.5		6	dB	
Receiver (1.25G)						
Optical Center Wavelength		1260		1600	nm	
Received Sensitivity	RSENS			-28	dBm	5
Optical Power Overload	POL			-7	dBm	
Receiver Reflectance	RFL			-27	dB	
Rx_LOS of Signal Assert	LOSA	-40			dBm	
Rx_LOS of Signal De-Assert	LOSD			-30	dBm	
Rx_LOS of Signal Hysteresis	LOSH	0.5		6	dB	

Notes:

1. The optical power is launched into SMF.
2. See details in ITU Channel Wavelength Guide.
3. Measured with PRBS 2^{31}-1 test pattern @10.3125Gbps or 2^{7}-1 test pattern @1.25Gbps.
4. Measured with worst ER=8.2dB, BER less than $1E^{-12}$, and PRBS 2^{31}-1 @10.3125Gbps.
5. Measured with worst ER=8.2dB, BER less than $1E^{-12}$, and PRBS 2^{7}-1 @1.25Gbps.

Pin Descriptions

Pin	Symbol	Name/Description	Notes
1	VeeT	Transmitter Ground. Common with Receiver Ground.	
2	Tx_Fault	Transmitter Fault.	
3	Tx_Disable	Transmitter Disable. Laser output disabled on “high” or “open.”	
4	SDA	2-Wire Serial Interface Data.	
5	SCL	2-Wire Serial Interface Clock.	
6	MOD_ABS	Module Absent. Grounded within the Module.	
7	RS0	Rate Select 0.	
8	LOS	Loss of Signal Indication. “Logic 0” indicates normal operation.	
9	RS1	No Connection Required.	
10	VeeR	Receiver Ground. Common with Transmitter Ground.	
11	VeeR	Receiver Ground. Common with Transmitter Ground.	
12	RD-	Receiver Inverted Data Out. AC Coupled.	
13	RD+	Receiver Non-Inverted Data Out. AC Coupled.	
14	VeeR	Receiver Ground. Common with Transmitter Ground.	
15	VccR	Receiver Power Supply.	
16	VccT	Transmitter Power Supply.	
17	VeeT	Transmitter Ground. Common with Receiver Ground.	
18	TD+	Transmitter Non-Inverted Data In. AC Coupled.	
19	TD-	Transmitter Inverted Data In. AC Coupled.	
20	VeeT	Transmitter Ground. Common with Receiver Ground.	

Electrical Pin-Out Details

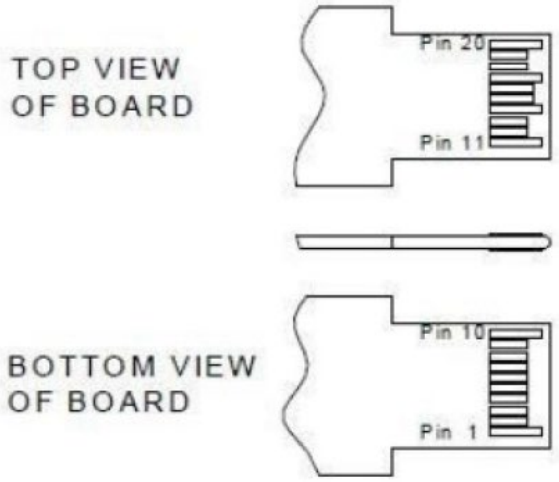

Recommended Interface Circuit

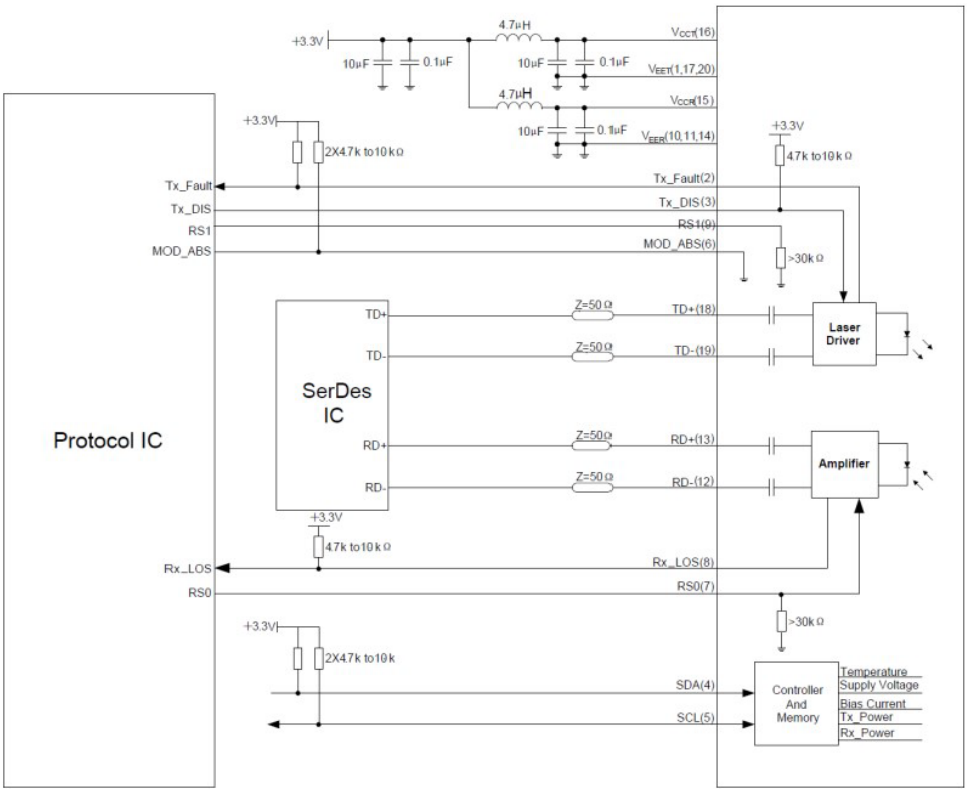

Mechanical Specifications

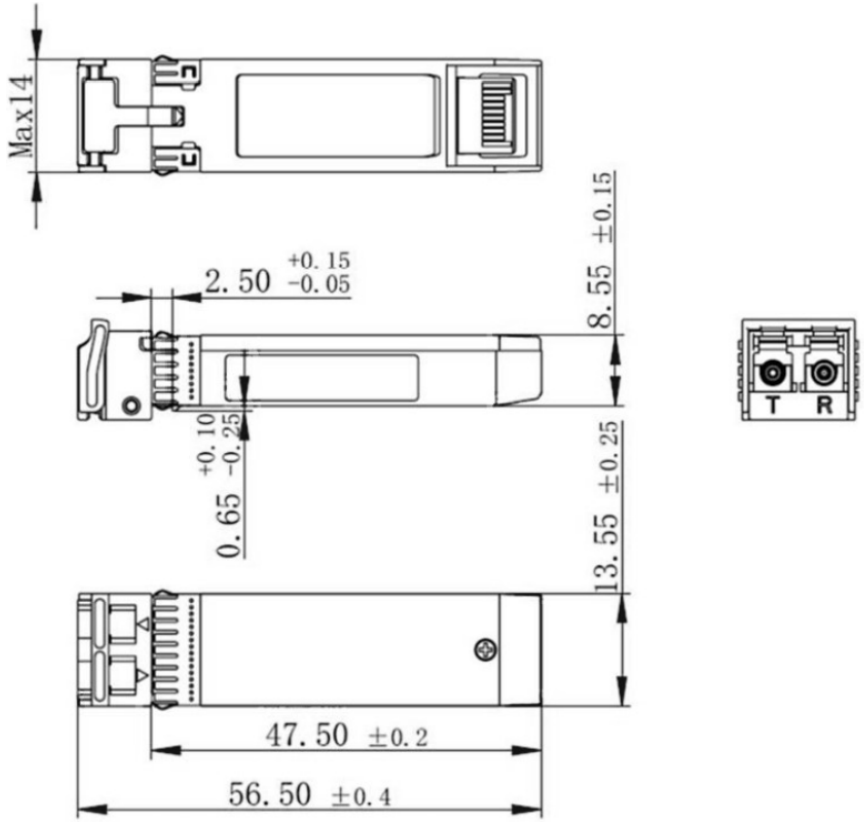

About AddOn Networks

In 1999, AddOn Networks entered the market with a single product. Our founders fulfilled a severe shortage for compatible, cost-effective optical transceivers that compete at the same performance levels as leading OEM manufacturers. Adhering to the idea of redefining service and product quality not previously had in the fiber optic networking industry, AddOn invested resources in solution design, production, fulfillment, and global support.

Combining one of the most extensive and stringent testing processes in the industry, an exceptional free tech support center, and a consistent roll-out of innovative technologies, AddOn has continually set industry standards of quality and reliability throughout its history.

Reliability is the cornerstone of any optical fiber network and is ingrained in AddOn's DNA. It has played a key role in nurturing the long-term relationships developed over the years with customers. AddOn remains committed to exceeding industry standards with certifications ranging from NEBS Level 3 to ISO 9001:2015 with every new development while maintaining the signature reliability of its products.

U.S. Headquarters

Email: sales@addonnetworks.com

Telephone: +1 877.292.1701

Fax: 949.266.9273

Europe Headquarters

Email: salesemea@addonnetworks.com

Telephone: +44 1285 842070