SFP-10GBASE-LR-2-I-AO

MSA Compliant 10GBase-LRL SFP+ Transceiver (SMF, 1310nm, 2km, LC, DOM, -40 to 85C)

Features:

- SFF-8432 and SFF-8472 Compliance
- Uncooled DFB transmitter and PIN receiver
- Duplex LC Connector
- Industrial Temperature -40 to 85 Celsius
- Single-mode Fiber
- Hot Pluggable
- Excellent ESD Protection
- Metal with Lower EMI
- RoHS Compliant and Lead Free

Applications:

- 6G Ethernet

Product Description

This MSA compliant SFP+ transceiver provides 10GBase-LRL throughput up to 2km over single-mode fiber (SMF) using a wavelength of 1310nm via an LC connector. It can operate at temperatures between 0 and 70C. All of our transceivers are built to comply with Multi-Source Agreement (MSA) standards and are uniquely serialized and tested for data-traffic and application to ensure seamless network integration. Additional product features include Digital Optical Monitoring (DOM) support which allows access to real-time operating parameters. We stand behind the quality of our products and proudly offer a limited lifetime warranty.

AddOn's transceivers are RoHS compliant and lead-free.

Absolute Maximum Ratings

Parameter	Symbol	Min.	Typ.	Max.	Unit	Notes
Maximum Supply Voltage	Vcc	-0.5		4	V	1
Storage Temperature	TS	-40		85	°C	2
Operating Case Temperature	Tc	-40		85	°C	3
Data Rate	DR	9.83	10.3125	11.3	Gbps	4
Bit Error Rate	BER			10^{-12}		

Notes:

1. For electrical power interface
2. Ambient Temperature
3. Case Temperature
4. IEEE 802.3ae

Link Distances

Data Rate	Fiber Type	Distance Range (km)
9.83 –11.3 Gb/s	9/125um SMF	2

Electrical Characteristics (VCC=3.14V to 3.46V, TC=-0°C to 70°C)

Parameter	Symbol	Min.	Typ.	Max.	Unit	Notes
Power Supply Voltage	Vcc	3.14	3.30	3.46	V	
Power Supply Current	Icc		230	300	mA	
Transmitter						
Differential data input swing	VIN,pp	180		700	mV	
Input differential impedance	RIN		100		Ω	
Transmit Disable Voltage	V_D	2		Vcc	V	
Transmit Enable Voltage	V_{EN}	V_{EE}		V_{EE}+0.8	V	
Receiver						
Differential data output swing	VOUT, pp	300		850	mV	
Data output rise/fall time (20%-80%)	Tr /Tf	28			ps	
LOS Asset	VLOSA	2		Host_Vcc	V	
LOS De-Assert	VLOSD	Vcc		Vcc+0.5	V	

Optical Characteristics

Parameter	Symbol	Min.	Typ.	Max.	Unit	Notes
Transmitter						
Output Optical Power	Ptx	-8.2		0.5	dBm	1
Optical Center Wavelength	λc	1260	1310	1355	nm	
Optical Modulation Amplitude	OMA	-5.2			dBm	2
Extinction Ratio	ER	3.5			dB	
Side Mode Suppression Ratio	SMSR	30			dB	
Relative Intensity Noise	RIN			-128	dB/Hz	
Transmitter Dispersion Penalty	TDP			3.2	dB	
Launch Power of OFF Transmitter	Poff			-30	dBm	1
Receiver						
Optical Center Wavelength	λc	1260		1355	nm	
Average Receive Power	Prx	-14.4		0.5	dBm	
Receiver Sensitivity @10.3Gb/s	S			-14.4	dBm	3
Receiver Reflectance	RL			-12	dB	
LOS Assert	LOSA	-30			dBm	
LOS De-Assert	LOSD			-15	dBm	
LOS Hysteresis	LOSH	0.5			dB	

Notes:

1. Average.
2. According to IEEE 802.3ae requirement.
3. Average. Test the resulting value using the minimum ER value within the defined range: BER<10^{-12}, PRBS 2^{31}-1.

Pin Descriptions

Pin	Symbol	Name/Descriptions	Ref.
1	VeeT	Transmitter Ground (Common with Receiver Ground).	1
2	Tx_Fault	Transmitter Fault.	2
3	Tx_Disable	Transmitter Disable. Laser output disabled on “high” or “open.”	3
4	SDA	2-Wire Serial Interface Data Line.	4
5	SCL	2-Wire Serial Interface Clock Line.	4
6	MOD_ABS	Module Absent. Grounded within the module.	4
7	RS0	No connection required.	
8	LOS	Loss of Signal indication. Logic 0 indicates normal operation	5
9	RS1	No connection required.	1
10	V_{eeR}	Receiver Ground (Common with Transmitter Ground).	1
11	V_{eeR}	Receiver Ground (Common with Transmitter Ground).	1
12	RD–	Receiver Inverted Data Out. AC Coupled.	
13	RD+	Receiver Non-Inverted Data Out. AC Coupled.	
14	V_{eeR}	Receiver Ground (Common with Transmitter Ground).	1
15	VccR	Receiver Power Supply	
16	VccT	Transmitter Power Supply	
17	V_{eeT}	Transmitter Ground (Common with Receiver Ground).	1
18	TD+	Transmitter Non-Inverted Data In. AC Coupled.	
19	TD–	Transmitter Inverted Data In. AC Coupled.	
20	VeeT	Transmitter Ground (Common with Receiver Ground).	1

Notes:

1. Circuit ground is isolated from the chassis ground.
2. Tx_Fault is the open collector output and should be pulled up with 4.7kΩ-10kΩ on the host board to a voltage between 2V and Vcc+0.3V.
3. Disabled: T_{DIS}>2V or open, enabled: T_{DIS}<0.8V.
4. Should be pulled up with 4.7kΩ-10kΩ on the host board to a voltage between 2V and Vcc+0.3V.
5. LOS is an open collector output and should be pulled up with 4.7kΩ-10kΩ on the host board to a voltage between 2V and Vcc+0.3V. The logic "0" indicates normal operation, and the logic "1" indicates that the receiver signal is lost.

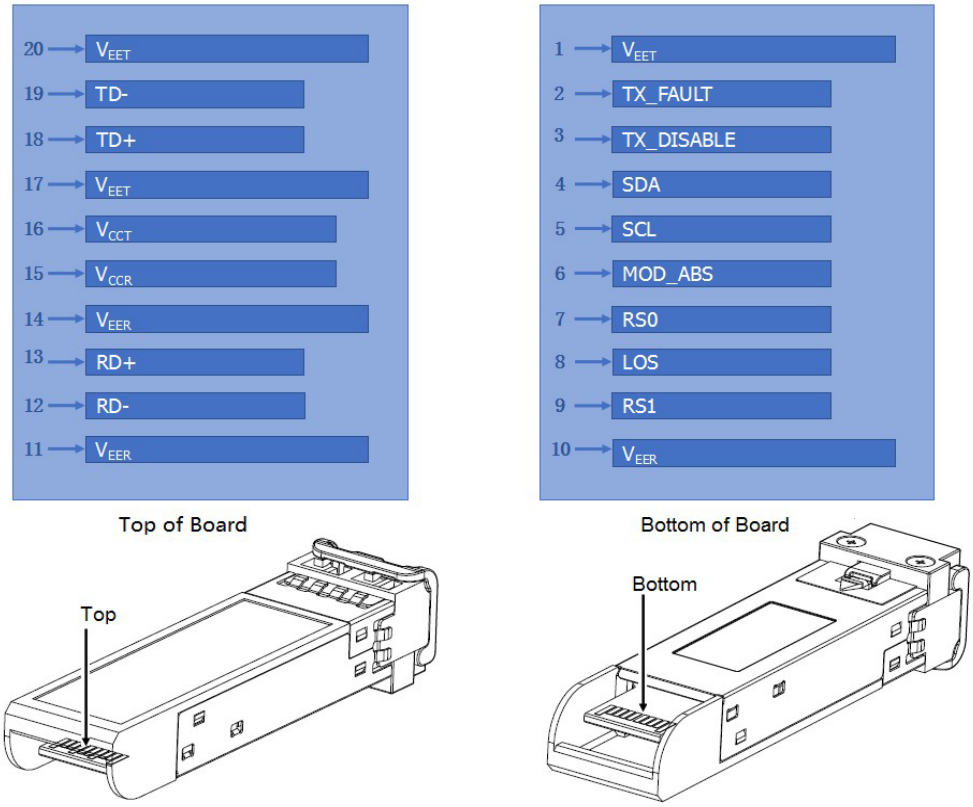

Pin-out of connector Block on Host board

Block Diagram

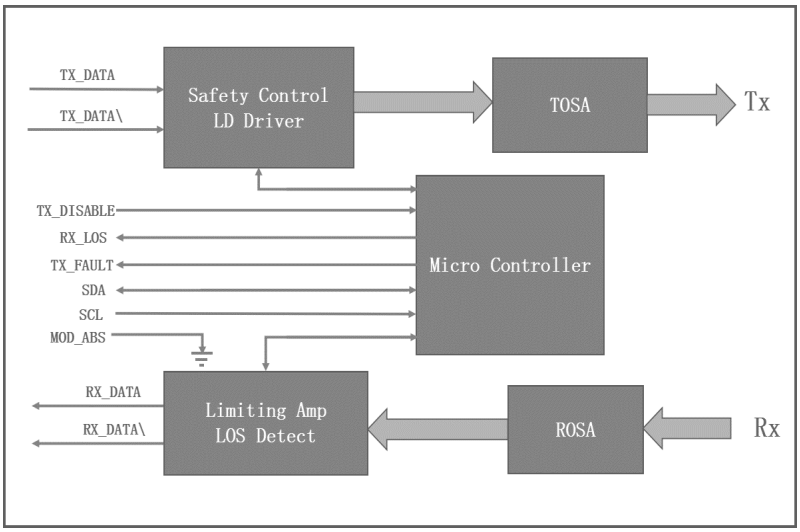

Mechanical Specifications

Small Form Factor Pluggable (SFP) transceivers are compatible with the dimensions defined by the SFP Multi-Sourcing Agreement (MSA).

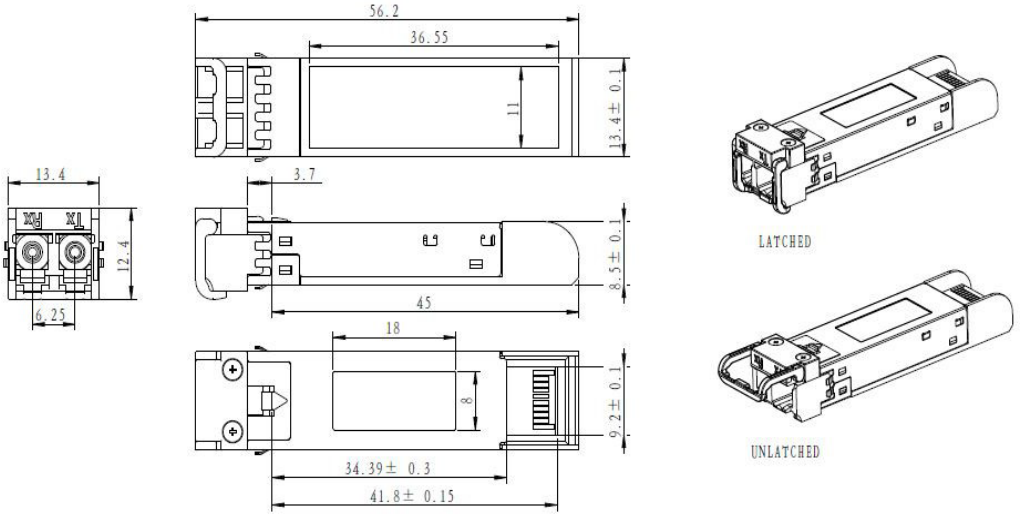

ALL DIMENSIONS ARE ±0.2mm UNLESS OTHERWISE SPECIFIED

UNIT: mm

EEPROM Information

EEPROM memory map specific data field description is as below:

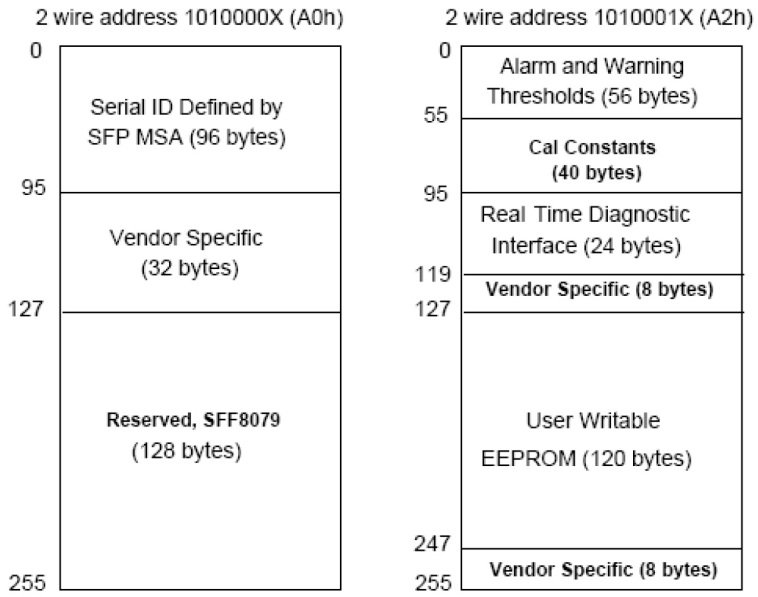

About AddOn Networks

In 1999, AddOn Networks entered the market with a single product. Our founders fulfilled a severe shortage for compatible, cost-effective optical transceivers that compete at the same performance levels as leading OEM manufacturers. Adhering to the idea of redefining service and product quality not previously had in the fiber optic networking industry, AddOn invested resources in solution design, production, fulfillment, and global support.

Combining one of the most extensive and stringent testing processes in the industry, an exceptional free tech support center, and a consistent roll-out of innovative technologies, AddOn has continually set industry standards of quality and reliability throughout its history.

Reliability is the cornerstone of any optical fiber network and is ingrained in AddOn's DNA. It has played a key role in nurturing the long-term relationships developed over the years with customers. AddOn remains committed to exceeding industry standards with certifications ranging from NEBS Level 3 to ISO 9001:2015 with every new development while maintaining the signature reliability of its products.

U.S. Headquarters

Email: sales@addonnetworks.com

Telephone: +1 877.292.1701

Fax: 949.266.9273

Europe Headquarters

Email: salesemea@addonnetworks.com

Telephone: +44 1285 842070