QSFPDD4-400GB-AOC13-5MLP-AO

MSA Compliant 400GBase-AOC QSFP-DD to QSFP-DD Low Power Active Optical Cable (850nm, MMF, 13.5m)

Features:

- QSFP-DD MSA HW Rev. 5.0 compliant
- 8x26.56GBaud optical links with integrated CDR
- CMIS 4.0 compliant
- CML compatible electrical I/O
- PAM4 & NRZ compatible
- OM3 multi-mode fiber
- Operating Temperature 0 to 70 Celsius
- OFNP jacket
- RoHS compliant and lead-free
- Hot pluggable

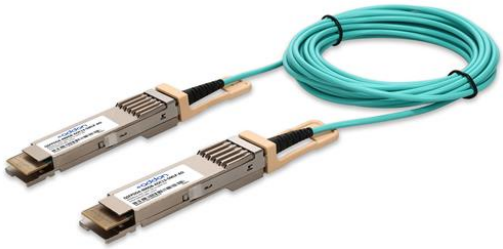

Applications:

- 400GBase Ethernet

Product Description

This is an MSA compliant 400GBase-AOC QSFP28 to QSFP28 active optical cable that operates over active fiber with a maximum reach of 13.5m (44.3ft). At a wavelength of 850nm, it has been programmed, uniquely serialized, and data-traffic and application tested to ensure it is 100% compliant and functional. This active optical cable is built to comply with MSA (Multi-Source Agreement) standards. We stand behind the quality of our products and proudly offer a limited lifetime warranty.

AddOn's transceivers are RoHS compliant and lead-free.

Absolute Maximum Ratings

Parameter	Symbol	Min.	Typ.	Max.	Unit	Notes
Storage Ambient Temperature	Tstg	-40		85	˚C	
Operating Case Temperature	Tc	0	25	70	ºC	1
Module Supply Voltage	Vcc	3.14	3.3	3.46	V	
Power Consumption	Pd		7	7.27	W	
Single Module Supply Current	I_{IN}		2100		mA	
Relative Humidity – Storage	RH_{stg}	0		95	%	2
Relative Humidity – Operating	RH_{op}	0		85	%	2
Signaling Speed Per Channel	S		26.56		GBaud	

Notes:

1. Commercial temperature range.
2. RH is a non-condensing condition.
3. Exceeding the Absolute Maximum Ratings may cause irreversible damage to the device. The device is not intended to be operated under the conditions of simultaneous Absolute Maximum Ratings, a condition which may cause irreversible damage to the device.

Cable Specifications

Parameter	Value	Unit
Cable Diameter	3.0 ± 0.15	mm
Minimum Bend Radius	30	mm

Electrical Characteristics

Parameter	Symbol	Min.	Typ.	Max.	Unit	Notes
Power Supply Voltage	Vcc	3.14	3.3	3.46	V	
Transmitter						
Tx_Data Differential Input Voltage	VIN	400		900	mV	
Tx_Data Differential Input Impedance	ZIN		100		Ω	
Receiver						
Rx_Data Differential Output Voltage	VOUT			900	mV	
Rx_Data Differential Output Impedance	ZOUT	90	100	110	Ω	
Link BER	BER			$2.4E^{-4}$		1

Notes:

1. Better than $2.4E^{-4}$ @26.56GBaud PRBS31.

Pin Descriptions

Pin	Symbol	Name/Description	Notes
1	GND	Module Ground.	
2	Tx2-	Transmitter Inverted Data Input.	
3	Tx2+	Transmitter Non-Inverted Data Input.	
4	GND	Module Ground.	
5	Tx4-	Transmitter Inverted Data Input.	
6	Tx4+	Transmitter Non-Inverted Data Input.	
7	GND	Module Ground.	
8	ModSelL	Module Select.	
9	ResetL	Module Reset.	
10	VccRx	+3.3V Receiver DC Power Supply.	
11	SCL	I^2C Serial Clock.	
12	SDA	I^2C Serial Data.	
13	GND	Module Ground.	
14	Rx3+	Receiver Non-Inverted Differential Output.	
15	Rx3-	Receiver Inverted Differential Output.	
16	GND	Module Ground.	
17	Rx1+	Receiver Non-Inverted Differential Output.	
18	Rx1-	Receiver Inverted Differential Output.	
19	GND	Module Ground.	
20	GND	Module Ground.	
21	Rx2-	Receiver Inverted Differential Output.	
22	Rx2+	Receiver Non-Inverted Differential Output.	
23	GND	Module Ground.	
24	Rx4-	Receiver Inverted Differential Output.	
25	Rx4+	Receiver Non-Inverted Differential Output.	
26	GND	Module Ground.	
27	ModPrsL	Module Present.	
28	IntL	Interrupt.	
29	VccTx	+3.3V Transmitter DC Power Supply.	
30	Vcc1	+3.3V DC Power Supply.	
31	Init Mode	Initialization Mode.	
32	GND	Module Ground.	
33	Tx3+	Transmitter Non-Inverted Data Input.	
34	Tx3-	Transmitter Inverted Data Input.	
35	GND	Module Ground.	

36	Tx1+	Transmitter Non-Inverted Data Input.	
37	Tx1-	Transmitter Inverted Data Input.	
38	GND	Module Ground.	
39	GND	Module Ground.	
40	Tx6-	Transmitter Inverted Data Input.	
41	Tx6+	Transmitter Non-Inverted Data Input.	
42	GND	Module Ground.	
43	Tx8-	Transmitter Inverted Data Input.	
44	Tx8+	Transmitter Non-Inverted Data Input.	
45	GND	Module Ground.	
46	Reserved.	Not Connected.	
47	NC	Not Connected.	
48	VccRx1	+3.3V DC Power Supply.	
49	NC	Not Connected.	
50	NC	Not Connected.	
51	GND	Module Ground.	
52	Rx7+	Receiver Non-Inverted Differential Output.	
53	Rx7-	Receiver Inverted Differential Output.	
54	GND	Module Ground.	
55	Rx5+	Receiver Non-Inverted Differential Output.	
56	Rx5-	Receiver Inverted Differential Output.	
57	GND	Module Ground.	
58	GND	Module Ground.	
59	Rx6-	Receiver Inverted Differential Output.	
60	Rx6+	Receiver Non-Inverted Differential Output.	
61	GND	Module Ground.	
62	Rx8-	Receiver Inverted Differential Output.	
63	Rx8+	Receiver Non-Inverted Differential Output.	
64	GND	Module Ground.	
65	NC	Not Connected.	
66	Reserved.	Not Connected.	
67	VccTx1	+3.3V DC Power Supply.	
68	Vcc2	+3.3V DC Power Supply.	
69	Reserved	Not Connected.	
70	GND	Module Ground.	
71	Tx7+	Transmitter Non-Inverted Data Input.	
72	Tx7-	Transmitter Inverted Data Input.	

73	GND	Module Ground.	
74	Tx5+	Transmitter Non-Inverted Data Input.	
75	Tx5-	Transmitter Inverted Data Input.	
76	GND	Module Ground.	

Electrical Pin-Out Details

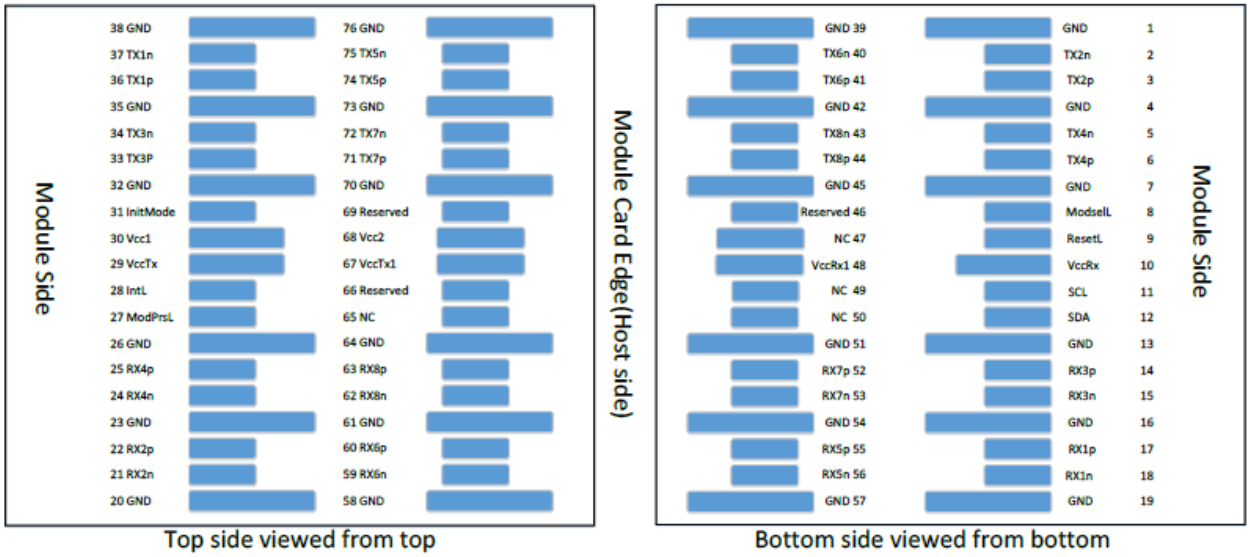

Block Diagram

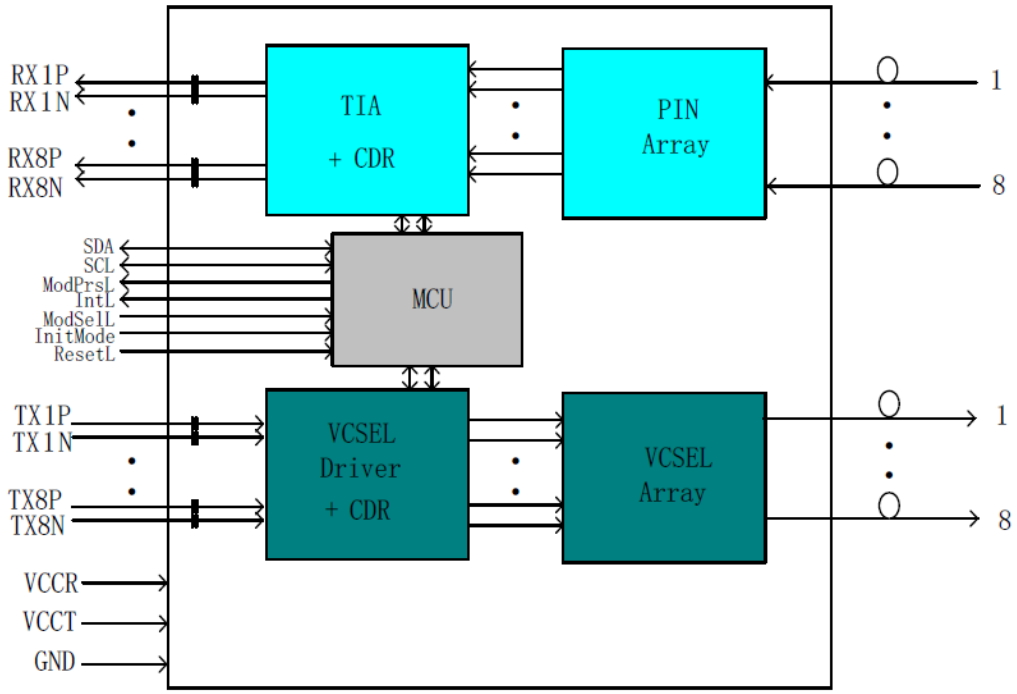

Electrical Interface

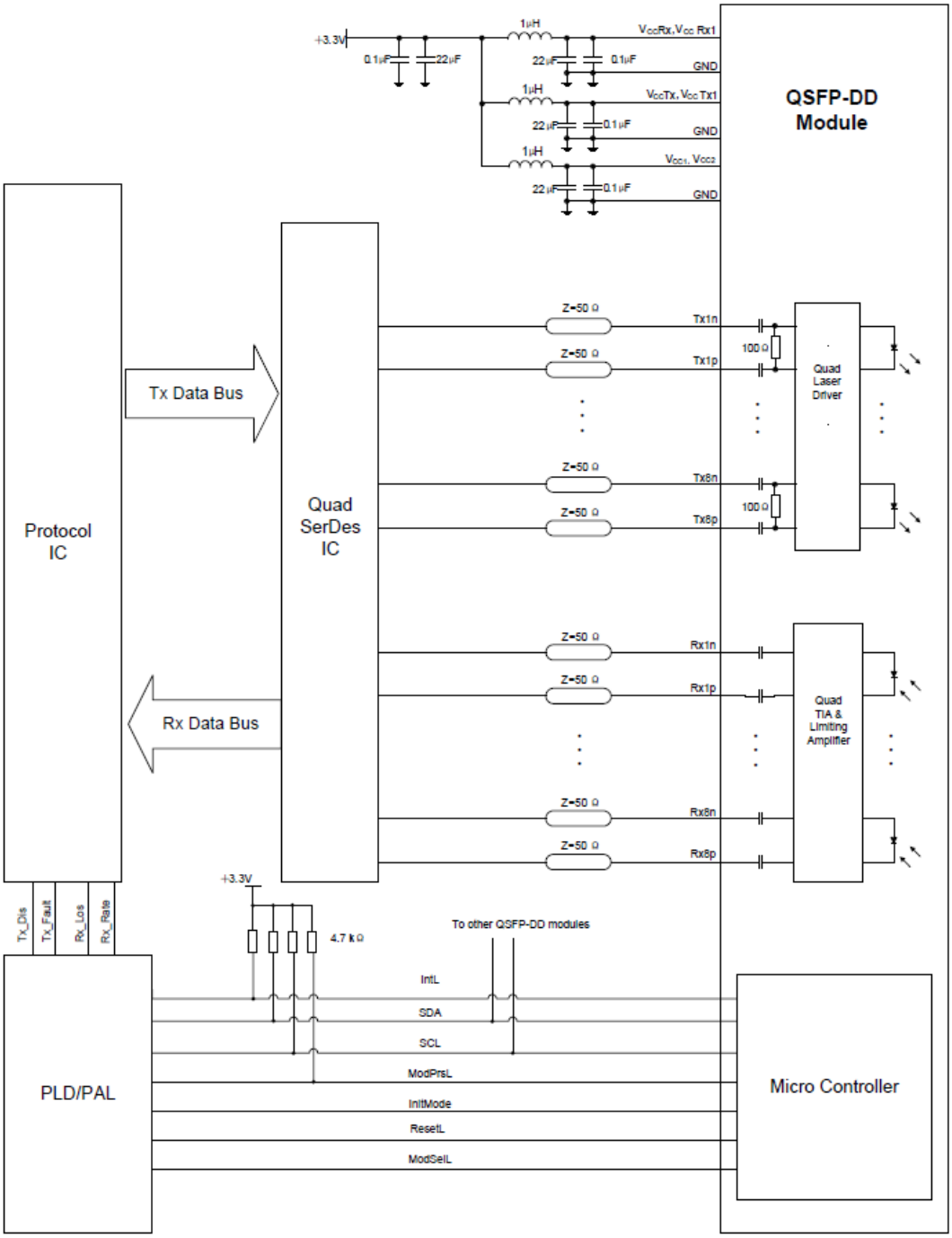

Mechanical Specifications

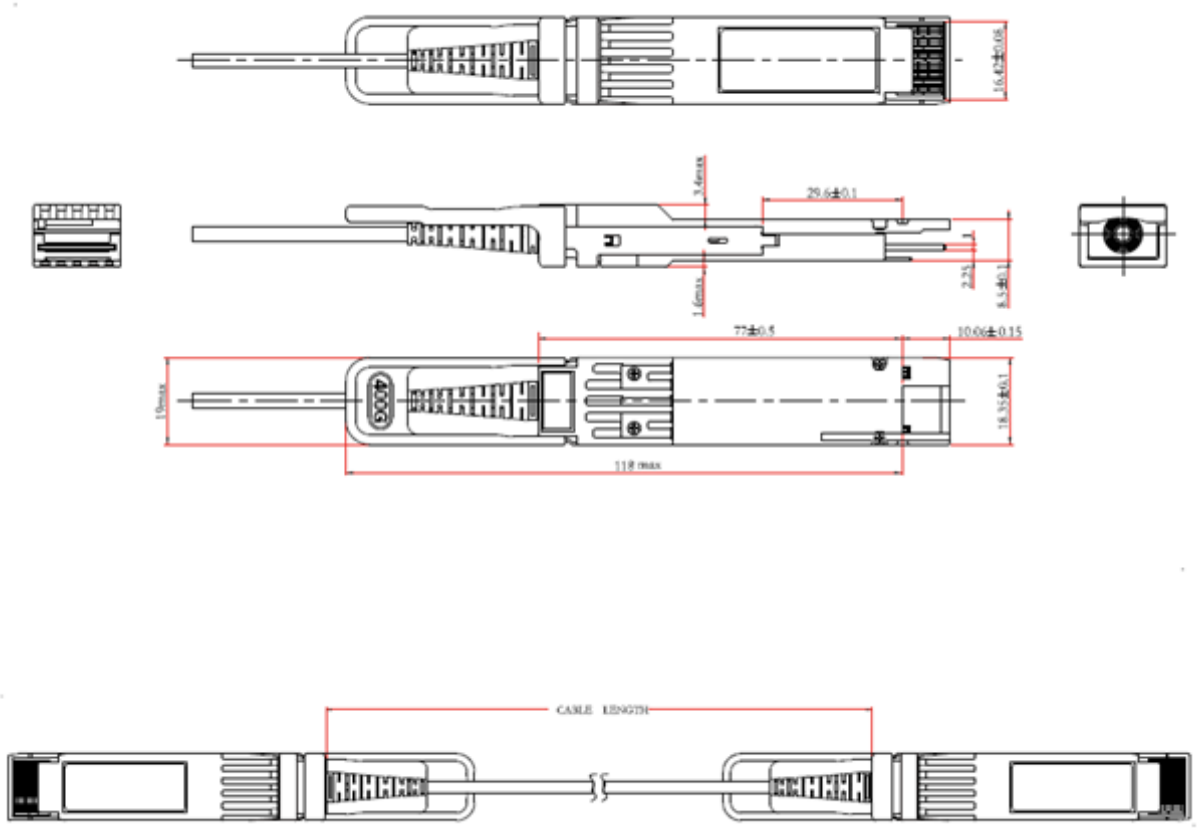

Notes:

1. Tolerance +/-0.1mm.
2. Others according with QSFP-DD MSA or customer specifications.
3. Light Port according with fiber connector specifications.
4. For cable lengths greater than 5m, the cable length tolerance is +4%/-0%.

About AddOn Networks

In 1999, AddOn Networks entered the market with a single product. Our founders fulfilled a severe shortage for compatible, cost-effective optical transceivers that compete at the same performance levels as leading OEM manufacturers. Adhering to the idea of redefining service and product quality not previously had in the fiber optic networking industry, AddOn invested resources in solution design, production, fulfillment, and global support.

Combining one of the most extensive and stringent testing processes in the industry, an exceptional free tech support center, and a consistent roll-out of innovative technologies, AddOn has continually set industry standards of quality and reliability throughout its history.

Reliability is the cornerstone of any optical fiber network and is ingrained in AddOn's DNA. It has played a key role in nurturing the long-term relationships developed over the years with customers. AddOn remains committed to exceeding industry standards with certifications ranging from NEBS Level 3 to ISO 9001:2015 with every new development while maintaining the signature reliability of its products.

U.S. Headquarters

Email: sales@addonnetworks.com

Telephone: +1 877.292.1701

Fax: 949.266.9273

Europe Headquarters

Email: salesemea@addonnetworks.com

Telephone: +44 1285 842070