**SFP-10GB-DW-C-E-AO**

MSA Compliant 10GBase-DWDM 100GHz SFP+ Transceiver (SMF, Tunable, 80km, LC, DOM, -20 to 85C)

**Features:**

- Small Form Factor Pluggable WDM Optical Transceiver from 191.3 to 196.3THz with 100GHz Spacing
- 10G Electrical Interface (SFF-8418)
- Self-Tuning Function Enables Automatic Link-Up
- Loss of Signal (LOS) Function
- Operating Data Rate: 9.83 to 10.31Gbps
- Up to 80km Over SMF (ITU-T G.652)
- Single Voltage 3.3V Power Supply
- LC Connector Interface
- Operating Temperature: -20 to 85 Celsius, -40C Cold Start
- Hot-Pluggable Electrical Interface
- RoHS Compliant and Lead-Free

**Applications:**

- 10GBase Ethernet

**Product Description**

This MSA compliant SFP+ transceiver provides 10GBase-DWDM throughput up to 80km over single-mode fiber (SMF) using a tunable wavelength via an LC connector. It can operate at temperatures between -20 and 85C. This easy to install, hot swappable transceiver has been programmed, uniquely serialized and data-traffic and application tested to ensure that it will initialize and perform identically. Digital optical monitoring (DOM) support is also present to allow access to real-time operating parameters. We stand behind the quality of our products and proudly offer a limited lifetime warranty.

AddOn's transceivers are RoHS compliant and lead-free.

## ITU Channel Wavelength Guide

| ITU Channel | Frequency (THz) | Center Wavelength (nm) | ITU Channel | Frequency (THz) | Center Wavelength (nm) |
|---|---|---|---|---|---|
| **13** | 191.30 | 1567.13 | **39** | 193.90 | 1546.12 |
| **14** | 191.40 | 1566.31 | **40** | 194.00 | 1545.32 |
| **15** | 191.50 | 1565.50 | **41** | 194.10 | 1544.53 |
| **16** | 191.60 | 1564.68 | **42** | 194.20 | 1543.73 |
| **17** | 191.70 | 1563.86 | **43** | 194.30 | 1542.94 |
| **18** | 191.80 | 1563.05 | **44** | 194.40 | 1542.14 |
| **19** | 191.90 | 1562.23 | **45** | 194.50 | 1541.35 |
| **20** | 192.00 | 1561.42 | **46** | 194.60 | 1540.56 |
| **21** | 192.10 | 1560.61 | **47** | 194.70 | 1539.77 |
| **22** | 192.20 | 1559.79 | **48** | 194.80 | 1538.98 |
| **23** | 192.30 | 1558.98 | **49** | 194.90 | 1538.19 |
| **24** | 192.40 | 1558.17 | **50** | 195.00 | 1537.40 |
| **25** | 192.50 | 1557.36 | **51** | 195.10 | 1536.61 |
| **26** | 192.60 | 1556.56 | **52** | 195.20 | 1535.82 |
| **27** | 192.70 | 1555.75 | **53** | 195.30 | 1535.04 |
| **28** | 192.80 | 1554.94 | **54** | 195.40 | 1534.25 |
| **29** | 192.90 | 1554.13 | **55** | 195.50 | 1533.47 |
| **30** | 193.00 | 1553.33 | **56** | 195.60 | 1532.68 |
| **31** | 193.10 | 1552.52 | **57** | 195.70 | 1531.90 |
| **32** | 193.20 | 1551.72 | **58** | 195.80 | 1531.12 |
| **33** | 193.30 | 1550.92 | **59** | 195.90 | 1530.33 |
| **34** | 193.40 | 1550.12 | **60** | 196.00 | 1529.55 |
| **35** | 193.50 | 1549.32 | **61** | 196.10 | 1528.77 |
| **36** | 193.60 | 1548.52 | **62** | 196.20 | 1527.99 |
| **37** | 193.70 | 1547.72 | **63** | 196.30 | 1527.22 |
| **38** | 193.80 | 1546.92 | | | |

## Absolute Maximum Ratings

| Parameter | Symbol | Min. | Typ. | Max. | Unit | Notes |
|---|---|---|---|---|---|---|
| **Relative Humidity (Non-Condensing)** | | 5 | | 85 | % | |
| **Operating Case Temperature** | Tc | -20 | | 85 | °C | 1 |
| **Storage Temperature** | Tstg | -40 | | 85 | °C | |
| **Supply Voltage** | V | -0.3 | | 3.6 | | |
| **Data Rate** | Gbps | 9.8304 | | 10.3125 | | ± 100ppm |
| **Ambient Humidity (Non-Condensing)** | % | 5 | | 85 | | |
| **Modulation Type** | | 8B/10B, 64B/66B (NRZ) | | | | 2 |
| **Transmission Cable** | | SMF (ITU-T G.6520) 80km | | | | |

**Notes:**

1. Cold start temperature: -40°C.
2. 9.83, 10.31Gbps.

## Electrical Characteristics

| Parameter | Symbol | Min. | Typ. | Max. | Unit | Notes |
|---|---|---|---|---|---|---|
| **Voltage on LVTTL Input** | | -0.3 | | Vcc+0.3 | V | |
| **Tx Input Data Signal Levels (AC Coupled)** | | | | 1.2 | Vppd | |
| **Static Discharge Voltage HBM Per JEDEC JESD22-A224-B** | | -1000 | | 1000 | V | |
| | | -2000 | | 2000 | | |
| **Peak Optical Input Power** | | | | -6 | dBm | |
| **Power Supply Voltage** | | 3.14 | 3.3 | 3.46 | Vcc | |
| **Power Consumption** | | | | 2.5 | W | |
| **Low-Speed Electrical Interface** | | | | | | |
| **Tx_Fault, Rx_LOS** | VOL | -0.3 | | 0.4 | V | 1 |
| | IOH | -50 | | 37.5 | uA | |
| **Tx_Disable, RS0, RS1** | VIL | -0.3 | | 0.8 | V | |
| | VIH | 2.0 | | VccT+0.3 | V | |

**Notes:**

1. Positive values indicate current flowing into the module. At 0.7mA.

## Optical Characteristics

| Parameter | Symbol | Min. | Typ. | Max. | Unit | Notes |
|---|---|---|---|---|---|---|
| **Transmitter** | | | | | | |
| **Center Frequency Range** | FR | 191.3 | | 196.3 | THz | |
| **Central Frequency Accuracy (EOL)** | | -12.5 | | 12.5 | GHz | |
| **Frequency Spacing** | | | 100 | | GHz | |
| **Side-Mode Suppression Ratio** | SMSR | 30 | | | dB | |
| **Spectral Width (-20dB)** | Δλ | | | 1 | nm | |
| **Average Optical Power** | Pavg | -1 | | 3 | dBm | |
| **Extinction Ratio** | ER | 8.2 | | | dB | |
| **Average Launch Power of Tx_Disable** | | | | -30 | dBm | |
| **Optical Return Loss Tolerance** | ORL | | | 20 | dB | |
| **Transmitter Reflectance** | TR | | | -12 | dB | |
| **Transmitter Eye Mask** | | Transmitter Eye Mask | | | | 1 |
| **Receiver** | | | | | | |
| **Center Frequency Range** | FR | 191.3 | | 196.3 | THz | |
| **Rx Sensitivity in Average** | Pr_Avg | | | -24 | dBm | 2 |
| | | | | -21 | dBm | 3 |
| **Rx Overload in Average** | OL | -7 | | | dBm | 2 |

| | | | | | | |
|---|---|---|---|---|---|---|
| **Receiver Reflectance** | RR | | | -27 | dB | |
| **LOS Assert Level** | LOSA | -32 | | | dBm | |
| **LOS De-Assert Level** | LOSD | | | -25 | dB | |
| **LOS Hysteresis** | LOSH | 0.5 | | | dB | |

**Notes:**

1. 9.8304Gbps to 10.3125Gbps, PRBS31 NRZ, 10GBase-LR mask and filter, at least 500 waveforms, and Hit Ratio meets the standard of $1E^{-12}$ under margin.
2. 10.3125Gbps, PRBS31 NRZ, ER>8.2dB, and BER=$1E^{-12}$, back-to-back.
3. 10.3125Gbps, PRBS31 NRZ, ER>8.2dB, BER=$1E^{-12}$, CD=1400ps/nm, and OSNR>35dB.

**Transmitter Eye Mask**

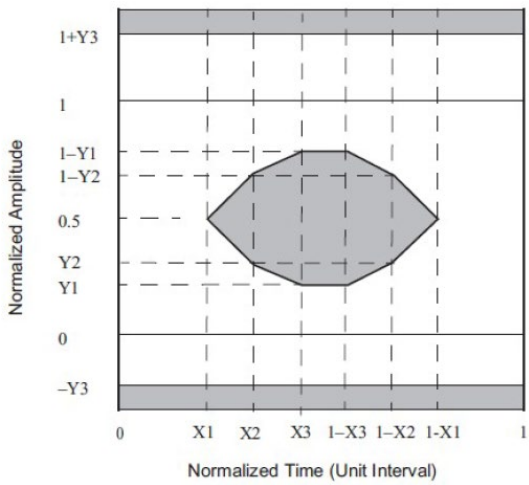


{X1, X2, X3, Y1, Y2, Y3} = {0.25, 0.40, 0.45, 0.25, 0.28, 0.40}

**Timing Specifications**

| Parameter | Symbol | Min. | Max. | Unit | Notes |
|---|---|---|---|---|---|
| **Tx_Disable Assert Time** | T_off | | 100 | us | 1 |
| **Tx_Disable Negate Time** | T_on | | 2 | ms | 2 |
| **Time to Initialize Cooled Module & Time to Power-Up a Cooled Module to Power Level II** | T_start_up_cooled | | 90 | s | 3 |
| **Tx_Fault Assert for Cooled Module** | Tx_fault_on_cooled | | 50 | ms | 4 |
| **Tx_Fault Reset** | T_reset | 10 | | us | 5 |
| **RS0, RS1: Rate Select Timing for Low Input** | T_RS0_L, T_RS1_L | | N/A | | 6 |
| **RS0, RS1: Rate Select Timing for High Input** | T_RS0_H, T_RS1_H | | N/A | | 6 |
| **Rx_LOS Assert Delay** | T_los_on | | 100 | | 7 |
| **Rx_LOS Negate Delay** | T_los_off | | 20 | | 8 |
| **Wavelength Tuning Time** | T_wave_change | 3 | 10 | | 9 |

**Notes:**

1. Rising edge of Tx_Disable to fall of output signal below 10% of normal.
2. Falling edge of Tx_Disable to rise of output signal above 90% of nominal. This only applies in normal operation, not during start-up or fault recovery.
3. From power on or hot plug, or Tx_Disable negated during power-up or Tx_Fault recovery, until cooled Power Level I part (or cooled Power Level II part during fault recovery) is fully operational. Also, from stop bit low-to-high SDA transition enabling Power Level II until cooled module is fully operational.
4. From occurrence of fault to assertion of Tx_Fault.
5. Time Tx_Disable must be held "high" to reset Tx_Fault.
6. From assertion until stable output.
7. From occurrence of loss of signal to assertion of Rx_LOS.
8. From occurrence of presence of signal to negation of Rx_LOS.
9. From writing of wavelength set command to completion of the wavelength tuning and output signal above 90%.

**Two-Wire I/O**

| Parameter | Symbol | Min. | Max. | Unit | Notes |
|---|---|---|---|---|---|
| **Clock Frequency** | fSCL | 0.1 | 400 | KHz | 1 |
| **Clock Pulse Width - Low** | tLOW | 1.3 | | us | |
| **Clock Pulse Width - High** | tHIGH | 0.6 | | us | |
| **START Hold Time** | tHD:STA | 0.6 | | us | |
| **START Set-Up Time** | tSU:STA | 0.6 | | us | |
| **Data In Hold Time** | tHD:DAT | 0 | | ns | |
| **Data In Set-Up Time** | tSU:DAT | 100 | | ns | |
| **Input Rise Time (100KHz) from (VIL, Max.-0.15) to (VIH, Min.+0.15)** | Tr,100 | | 1000 | ns | |
| **Input Rise Time (400KHz) from (VIL, Max.-0.15) to (VIH, Min.+0.15)** | Tr,400 | | 300 | ns | |
| **Input Fall Time (100KHz) from (VIH, Min.+0.15) to (VIL, Max.-0.15)** | Tf,100 | | 300 | ns | |
| **Input Fall Time (400KHz) from (VIH, Min.+0.15) to (VIL, Max.-0.15)** | Tf,400 | | 300 | ns | |
| **STOP Set-Up Time** | tSU:STO | 0.6 | | us | |
| **Time Bus is Free Before a New Transmission Can Start** | tBUF | 20 | | us | |
| **Time to Initialize** | T_init | | 300 | ms | |
| **Clock Stretching** | T_clock_hold | | 500 | us | |
| **Complete Single or Sequential Write Up to 4 Byte** | tWR | | 40 | ms | |
| **Complete Sequential Write of 5-8 Bytes** | tWR | | 80 | ms | |
| **Endurance of User Writable EEPROM (Write Cycles)** | | 10k | | cycle | |

**Notes:**

1. The module shall operate with fSCL up to 100kHz without requiring clock stretching. The module may clock stretch with fSCL greater than 100kHz and up to 400kHz.

**Pin Descriptions**

| Pin | Symbol | Name/Description | Plug Seq. | Notes |
|---|---|---|---|---|
| **1** | VeeT | Transmitter Ground. | 1 | |
| **2** | Tx_Fault | Transmitter Fault Indication. | 3 | |
| **3** | Tx_Disable | Transmitter Disable. | 3 | |
| **4** | SDA | 2-Wire Serial Interface Data. | 3 | |
| **5** | SCL | 2-Wire Serial Interface Clock. | 3 | |
| **6** | MOD_ABS | Module Absent. | 3 | |
| **7** | RS0 | Rate Select 0. Optionally controls. | 3 | |
| **8** | Rx_LOS | Receiver Loss of Signal Indication. | 3 | |
| **9** | RS1 | Rate Select 1. Optionally controls. | 3 | |
| **10** | VeeR | Receiver Ground. | 1 | |
| **11** | VeeR | Receiver Ground. | 1 | |
| **12** | RD- | Receiver Inverted Data Output. | 3 | |
| **13** | RD+ | Receiver Non-Inverted Data Output. | 3 | |
| **14** | VeeR | Receiver Ground. | 1 | |
| **15** | VccR | Receiver 3.3V Supply. | 2 | |
| **16** | VccT | Transmitter 3.3V Supply. | 2 | |
| **17** | VeeT | Transmitter Ground. | 1 | |
| **18** | TD+ | Transmitter Non-Inverted Data Input. | 3 | |
| **19** | TD- | Transmitter Inverted Data Input. | 3 | |
| **20** | VeeT | Transmitter Ground. | 1 | |

**Notes:**

1. The case makes electrical contact to the cage before any of the board edge contacts are made.
2. The module signal ground contacts, VeeR and VeeT, should be isolated from the module case.
3. SCL, SDA, and MOD_ABS should be pulled up with a 4.7kΩ to 10kΩ resistor on the host board.
   The pull-up voltage shall be VccT or VccR.
   SCL is the clock line of the 2-wire serial interface for serial ID.
   SDA is the data line of the 2-wire serial interface for serial ID.
   MOD_ABS is grounded by the module to indicate that the module is present.
4. VccR and VccT are the receiver and transmitter power supplies. They are defined as 3.3V±5% at the SFP+ connector pin. Recommended host board power supply filtering is shown below.
5. TD- and TD+ are the differential transmitter inputs. They are AC coupled, differential lines with 100Ω differential termination inside the module.
6. RD- and RD+ are the differential receiver outputs. They are AC coupled, 100Ω differential lines which should be terminated with 100Ω (differential) at the host.

## Block Diagram of the Transceiver

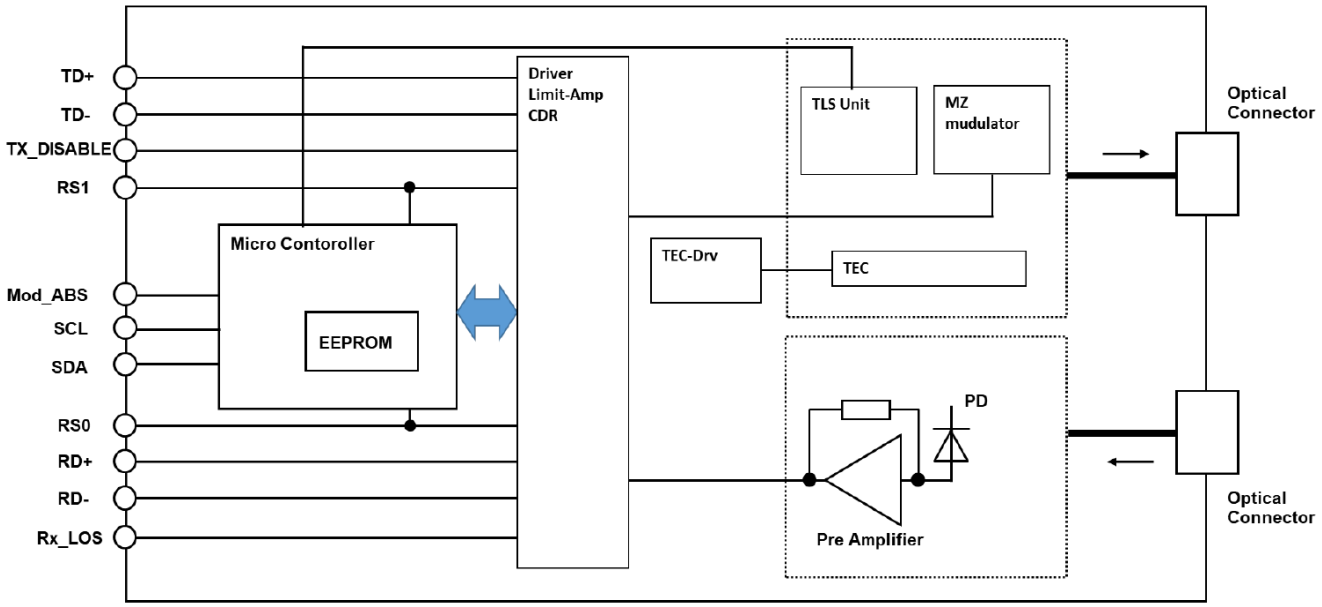


## Recommended Interface Circuit

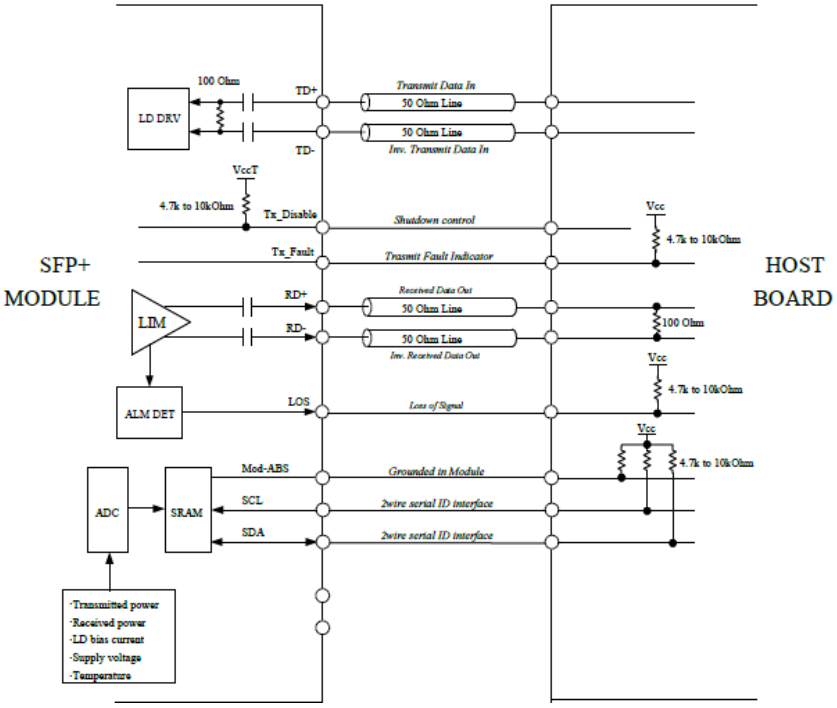

**Power Supply Filter**

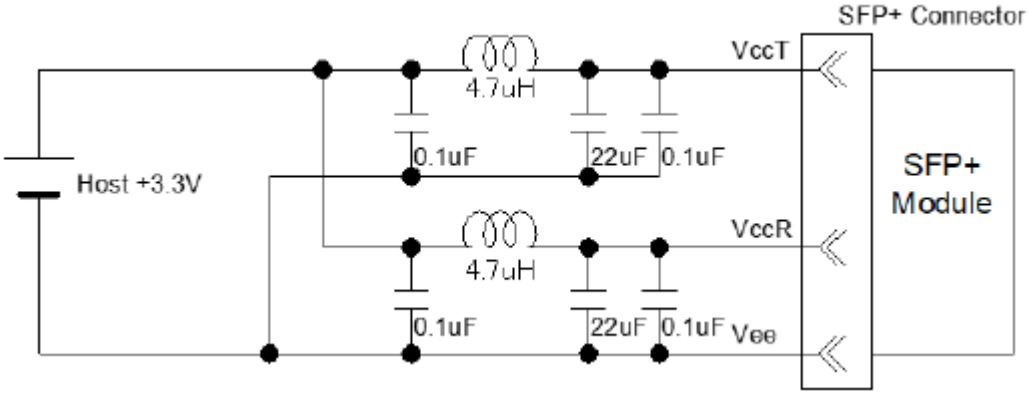


**Circuit Board Connector Layout**

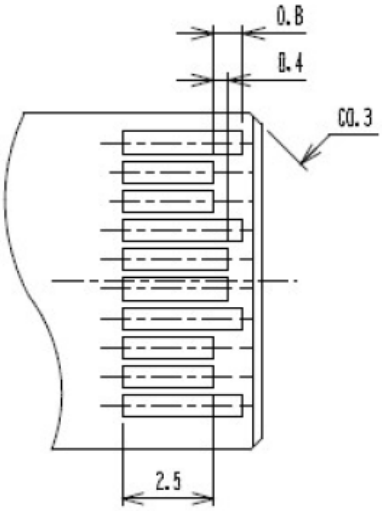


Top view of board

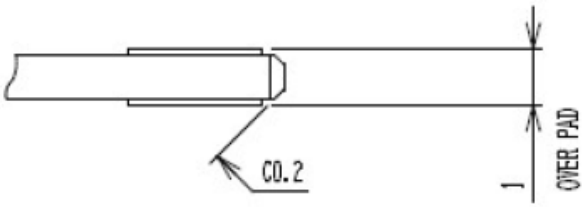


Side view of board

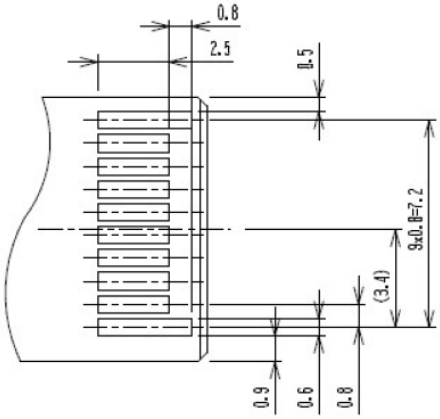


Bottom view of board

**Mechanical Specifications**

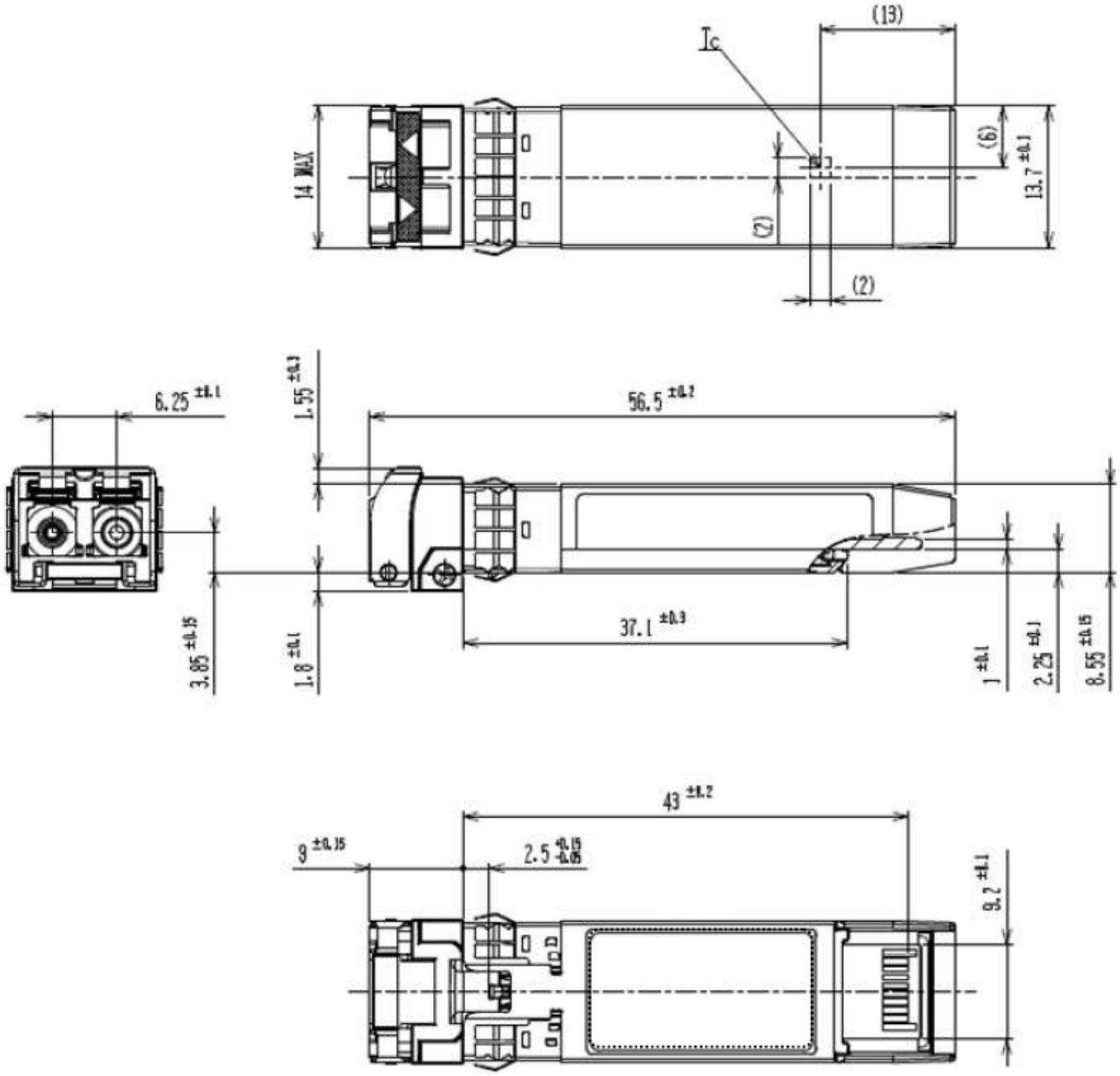

**About AddOn Networks**

In 1999, AddOn Networks entered the market with a single product. Our founders fulfilled a severe shortage for compatible, cost-effective optical transceivers that compete at the same performance levels as leading OEM manufacturers. Adhering to the idea of redefining service and product quality not previously had in the fiber optic networking industry, AddOn invested resources in solution design, production, fulfillment, and global support.

Combining one of the most extensive and stringent testing processes in the industry, an exceptional free tech support center, and a consistent roll-out of innovative technologies, AddOn has continually set industry standards of quality and reliability throughout its history.

Reliability is the cornerstone of any optical fiber network and is ingrained in AddOn's DNA. It has played a key role in nurturing the long-term relationships developed over the years with customers. AddOn remains committed to exceeding industry standards with certifications ranging from NEBS Level 3 to ISO 9001:2015 with every new development while maintaining the signature reliability of its products.


**U.S. Headquarters**

Email: sales@addonnetworks.com

Telephone: +1 877.292.1701

Fax: 949.266.9273

**Europe Headquarters**

Email: salesemea@addonnetworks.com

Telephone: +44 1285 842070