**ADD-QJUQAR-PDAC3M**

Juniper Networks® JNP-QSFP-DAC-3M to Arista Networks® CAB-Q-Q-3M Compatible TAA Compliant 40GBase-CU QSFP+ Direct Attach Cable (Passive Twinax, 3m)

**Features:**

- Full duplex 4 channel parallel passive optical cable
- SFF-8436 QSFP+ compliant
- Transmission data rate up to 10.3Gbps per channel
- Low power consumption
- Housing isolated from connector ground
- Hot pluggable electrical interface
- 3.3V power supply voltage
- Operating Temperature: 0 to 70 Celsius
- RoHS Compliant and Lead-Free



**Applications:**

- Serial Data Transmission
- 40GBase Ethernet

**Product Description**

This Juniper Networks® JNP-QSFP-DAC-3M to Arista Networks® CAB-Q-Q-3M dual OEM compatible 40GBase-CU QSFP+ to QSFP+ passive TAA (Trade Acts Agreement) compliant direct attach cable has a maximum reach of 3.0m (9.8ft). It is 100% Juniper Networks® to Arista Networks® compatible and has been programmed, uniquely serialized, and data-traffic and application tested to ensure that it is compliant and functional. This direct attach cable will initialize and perform identically to Juniper Networks® to Arista Networks®'s individual cables and is built to meet or exceed Juniper Networks® to Arista Networks®'s specifications and comply with MSA (Multi-Source Agreement) standards. We stand behind the quality of our products and proudly offer a limited lifetime warranty.

AddOn's transceivers are RoHS compliant and lead-free.

TAA refers to the Trade Agreements Act (19 U.S.C. & 2501-2581), which is intended to foster fair and open international trade. TAA requires that the U.S. Government may acquire only "U.S.-made or designated country end products."

TAA COMPLIANT

## Specifications

| Parameter | Specifications | Unit |
|---|---|---|
| **Minimum Dielectric Withstand Voltage** | 300 | VDC |
| **Insulation Resistance** | 1000 | MΩ |
| **Current Rating** | 0.5 Amp Minimum/Signal Contact | |
| **Operating Temperature** | 0 to 70 | °C |
| **Flammability Rating (Plastics)** | UL 94 | |
| **Shield** | Braid/Foil | |
| **Connector** | | |
| **Back Shell Material** | Nickel-Plated Zinc Diecast | |
| **Contact Material** | PCB with Gold-Plated Pads | |
| **Maximum Insertion Force** | 40 | N |
| **Maximum Withdrawal Force** | 30 | N |
| **Durability** | 250 | Cycles |
| **Tightest Recommended Vertical Spacing (Belly-to-Belly)** | 11.80 | mm |
| **Tightest Recommended Vertical Spacing (Stacked)** | 17.50 | mm |
| **Cable** | | |
| **Conductor** | Solid | |
| **Wire Gauge** | 28 | AWG |
| **Impedance** | 100±5 | Ω |
| **Construction** | Twinaxial | |
| **Jacket Type** | PVC | |

**Mechanical Specifications**

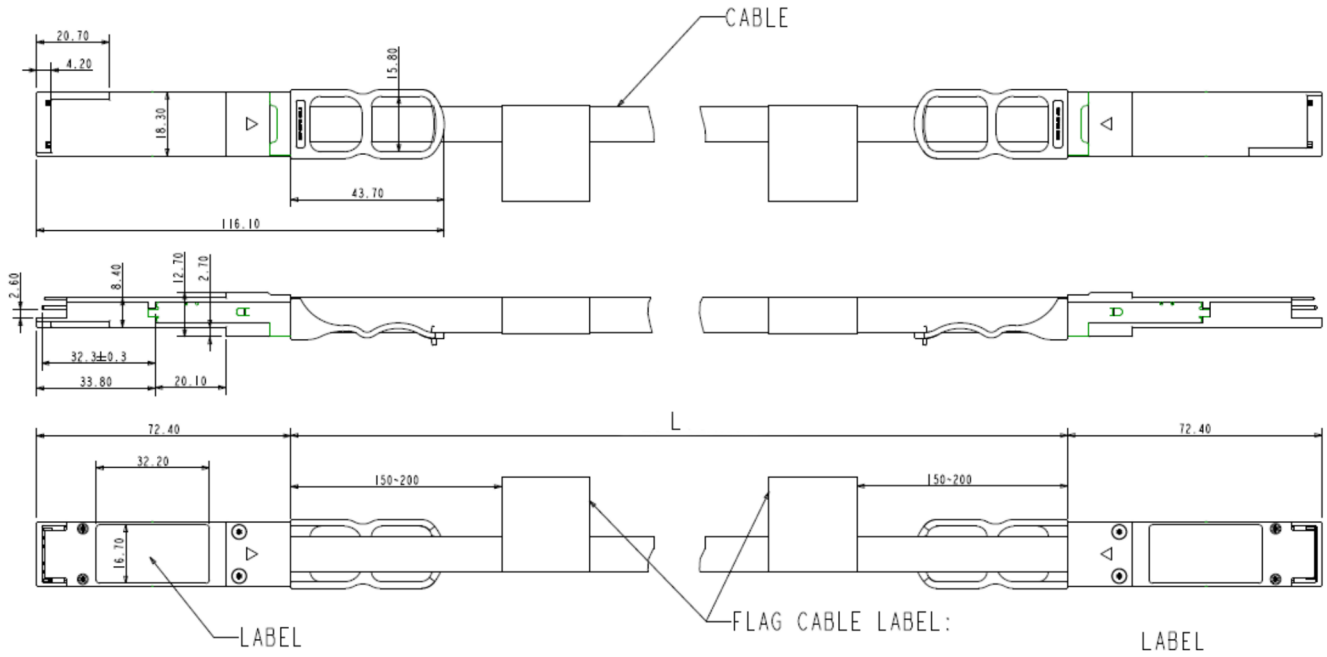

**About AddOn Networks**

In 1999, AddOn Networks entered the market with a single product. Our founders fulfilled a severe shortage for compatible, cost-effective optical transceivers that compete at the same performance levels as leading OEM manufacturers. Adhering to the idea of redefining service and product quality not previously had in the fiber optic networking industry, AddOn invested resources in solution design, production, fulfillment, and global support.

Combining one of the most extensive and stringent testing processes in the industry, an exceptional free tech support center, and a consistent roll-out of innovative technologies, AddOn has continually set industry standards of quality and reliability throughout its history.

Reliability is the cornerstone of any optical fiber network and is ingrained in AddOn's DNA. It has played a key role in nurturing the long-term relationships developed over the years with customers. AddOn remains committed to exceeding industry standards with certifications ranging from NEBS Level 3 to ISO 9001:2015 with every new development while maintaining the signature reliability of its products.




**U.S. Headquarters**

Email: sales@addonnetworks.com

Telephone: +1 877.292.1701

Fax: 949.266.9273

**Europe Headquarters**

Email: salesemea@addonnetworks.com

Telephone: +44 1285 842070