ADD-SARSIN-ADAC8M

Arista Networks® to Intel® Compatible TAA Compliant 10GBase-CU SFP+ to SFP+ DAC (Active Twinax, 8m)

Features:

- Up to 10Gbps bi-directional data links
- Industry Standard small form pluggable
- Dual SFP Connectors
- Single Power Supply 3.3V
- Operating Temperature: 0 to 70 Celsius
- Hot Pluggable
- RoHS Compliant and Lead-Free



Applications:

- 10G Fibre Channel
- 10G Ethernet

Product Description

This Arista Networks® to Intel® dual OEM compatible 10GBase-CU SFP+ to SFP+ active TAA (Trade Acts Agreement) compliant direct attach cable has a maximum reach of 8.0m (26.2ft). It is 100% Arista Networks® to Intel® compatible and has been programmed, uniquely serialized, and data-traffic and application tested to ensure that it is compliant and functional. This direct attach cable will initialize and perform identically to Arista Networks® and Intel®'s individual cables and is built to meet or exceed Arista Networks® and Intel®'s specifications, and comply with MSA (Multi-Source Agreement) standards. We stand behind the quality of our products and proudly offer a limited lifetime warranty.

AddOn's transceivers are RoHS compliant and lead-free.

TAA refers to the Trade Agreements Act (19 U.S.C. & 2501-2581), which is intended to foster fair and open international trade. TAA requires that the U.S. Government may acquire only "U.S.-made or designated country end products."

TAA COMPLIANT

General Specifications

Parameter	Symbol	Min	Typ.	Max.	Unit	Notes
Data Rate	DR		10.3125		Gbps	1
Bit Error Rate	BER			10^{-12}		
Operating Case Temperature	Tc	0		70	°C	2
Storage Temperature	Tstg	-40		85	°C	3
Input Voltage	Vcc	3.14	3.3	3.46	V	4
Supply Current	Icc		100	300	mA	4
Cable Impedance	Z	90	100	110	Ω	
Product Weight	GD		88		g/PCS	
Cable Weight	GC		42		G/M	
Dust Cap Weight	GS		0.80		g/PCS	
Wire Gauge			28		AWG	
Tolerance Range			8		±cm	

Notes:

1. IEEE 802.3ae compatible.
2. Case temperature.
3. Ambient temperature.
4. For electrical power interface.

Pin Descriptions

Pin	Symbol	Name/Description	Notes
1	VeeT	Transmitter ground. Common with receiver ground.	1
2	Tx_Fault	Transmitter Fault.	
3	Tx_Disable	Transmitter Disable. Laser output disabled on “high” or “open.”	2
4	SDA	Data line for Serial ID.	3
5	SCL	Clock line for Serial ID.	3
6	MOD_ABS	Module absent. Grounded within the module.	3
7	RS0	No connection required.	
8	LOS	Loss of Signal. Logic 0 indicated normal operation.	4
9	RS1	No connection required.	
10	VeeR	Receiver ground. Common with transmitter ground.	1
11	VeeR	Receiver ground. Common with transmitter ground.	1
12	RD-	Receiver Inverted DATA out. AC coupled.	
13	RD+	Receiver Non0inverted DATA out. AC coupled.	
14	VeeR	Receiver ground. Common with transmitter ground.	1
15	VccR	Receiver power supply.	
16	VccT	Transmitter power supply.	
17	VeeT	Transmitter ground. Common with receiver ground.	1
18	TD+	Transmitter Non-Inverted DATA in. AC coupled.	
19	TD-	Transmitter Inverted DATA in. AC coupled.	
20	VeeT	Transmitter ground. Common with receiver ground.	1

Notes:

1. Circuit ground is isolated from chassis ground.
2. Disabled: Tdis>2V or open, Enabled Tdis<0.8V.
3. Should be pulled up with 4.7kΩ-10kΩ on host board to a voltage between 2V and 3.6V.
4. LOS is open collector output.

Electrical Pad Layout

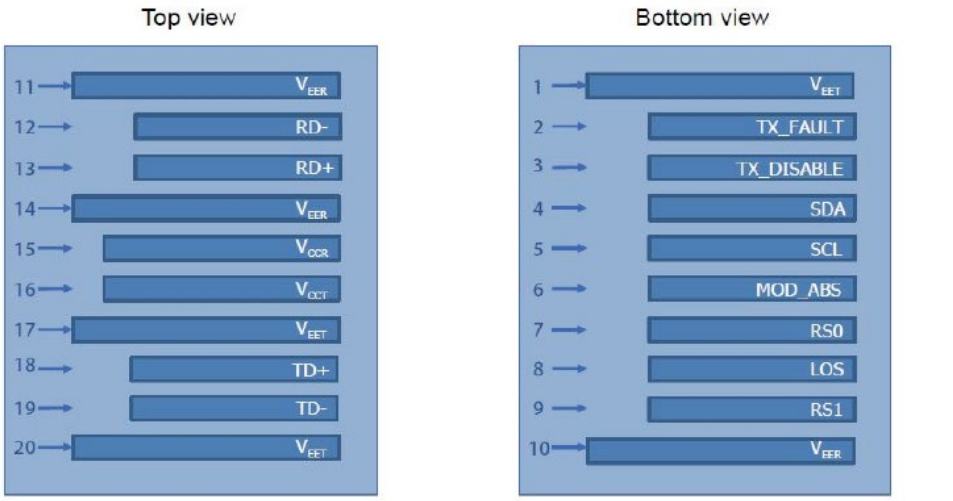

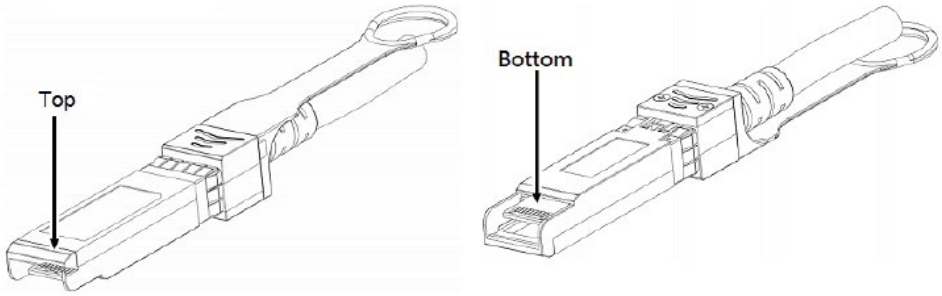

Block Diagram

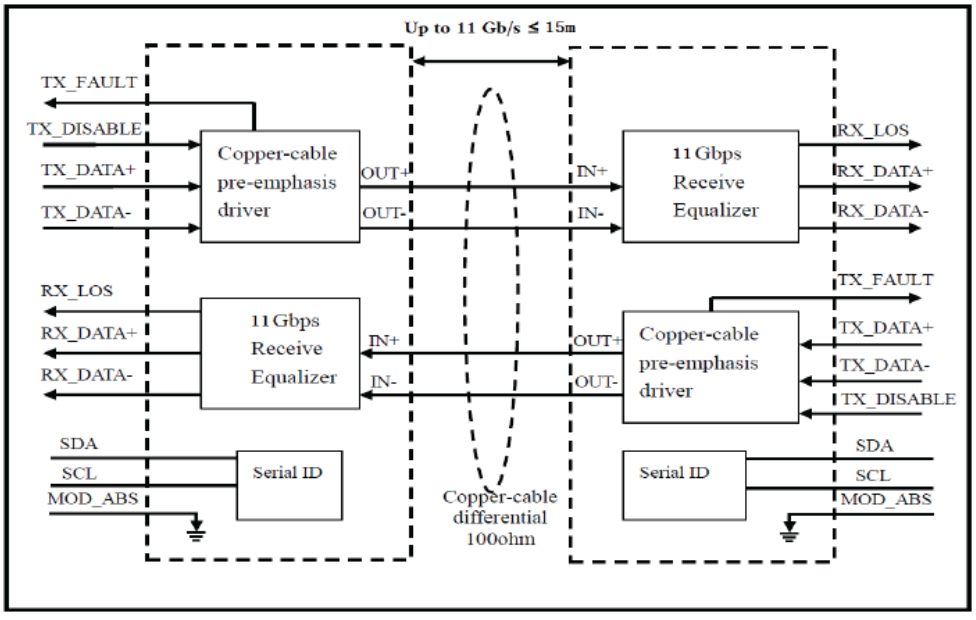

Mechanical Specifications

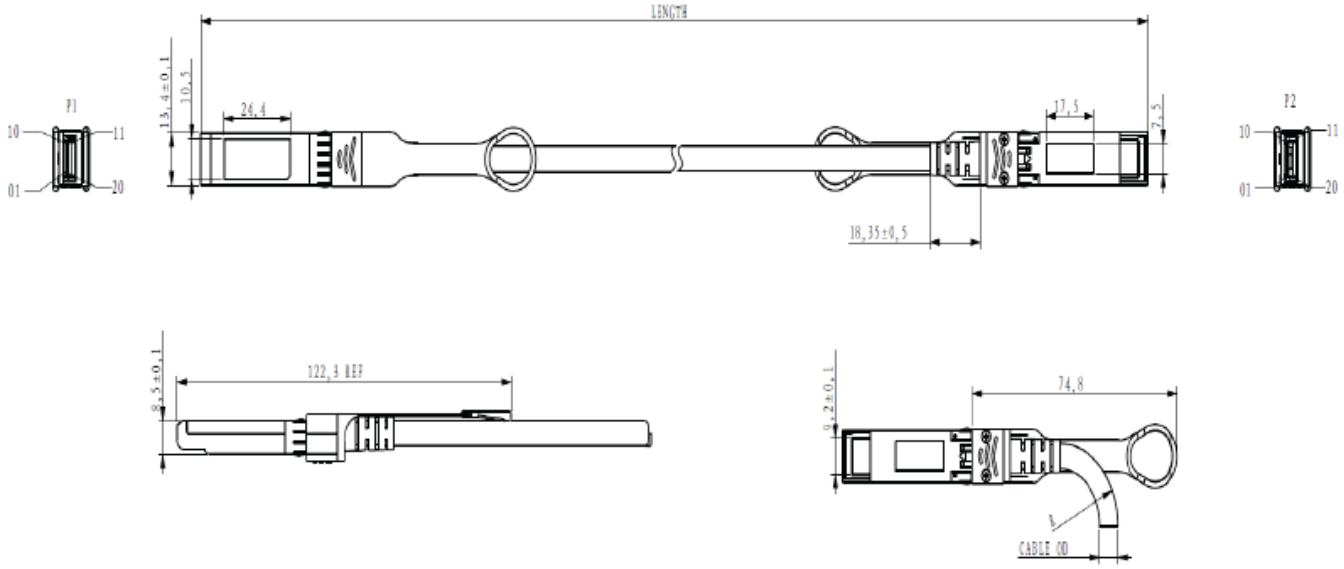

About AddOn Networks

In 1999, AddOn Networks entered the market with a single product. Our founders fulfilled a severe shortage for compatible, cost-effective optical transceivers that compete at the same performance levels as leading OEM manufacturers. Adhering to the idea of redefining service and product quality not previously had in the fiber optic networking industry, AddOn invested resources in solution design, production, fulfillment, and global support.

Combining one of the most extensive and stringent testing processes in the industry, an exceptional free tech support center, and a consistent roll-out of innovative technologies, AddOn has continually set industry standards of quality and reliability throughout its history.

Reliability is the cornerstone of any optical fiber network and is ingrained in AddOn's DNA. It has played a key role in nurturing the long-term relationships developed over the years with customers. AddOn remains committed to exceeding industry standards with certifications ranging from NEBS Level 3 to ISO 9001:2015 with every new development while maintaining the signature reliability of its products.



U.S. Headquarters

Email: sales@addonnetworks.com

Telephone: +1 877.292.1701

Fax: 949.266.9273

Europe Headquarters

Email: salesemea@addonnetworks.com

Telephone: +44 1285 842070